INSTACHEW

PET CARE MADE EASY

PRODUCT CATALOG

ABOUT US

MQRS Brands is a Canadian company established in 2016. At MQRS, we realize that there is a lack of innovative products in the pet industry, making it hard for owners to care for their pets. Since our inception we have introduced a variety of smart products bridging the gap between smart technology and pet supplies.

OUR MISSION

To solve day-to-day challenges faced by pet owners through the creation of innovative products made to simplify pet care.

APPS

INSTACHEW

Connect to the Instachew Smart Pet Feeder to monitor your pet's feeding schedule and communicate with your pet through dual audio-video communication.

GET IT ON Google Play

Download on the App Store

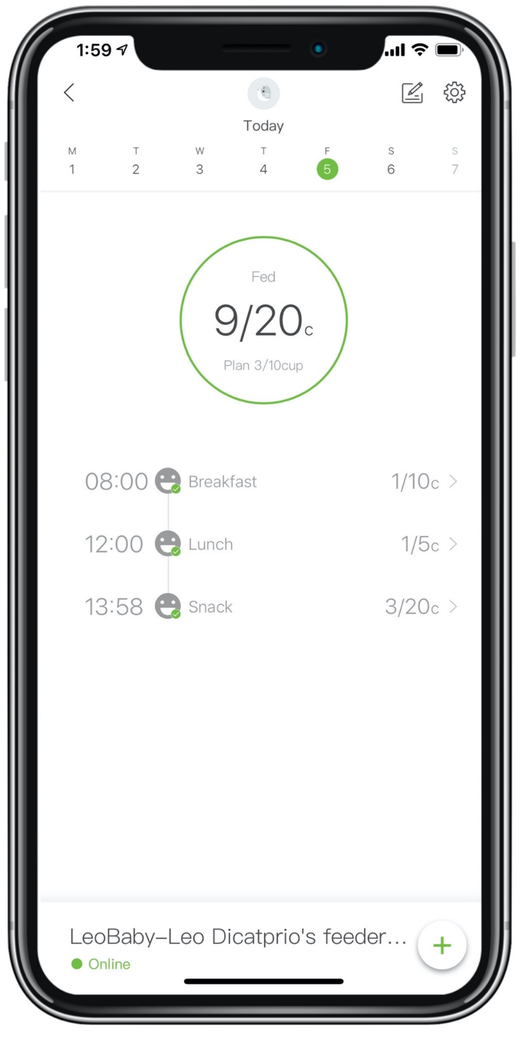

PETKIT

Connect to various PETKIT products, that allow for monitoring various functions such as: sleep cycle, weight, food intake, product temperature etc.

GET IT ON Google Play

Download on the App Store

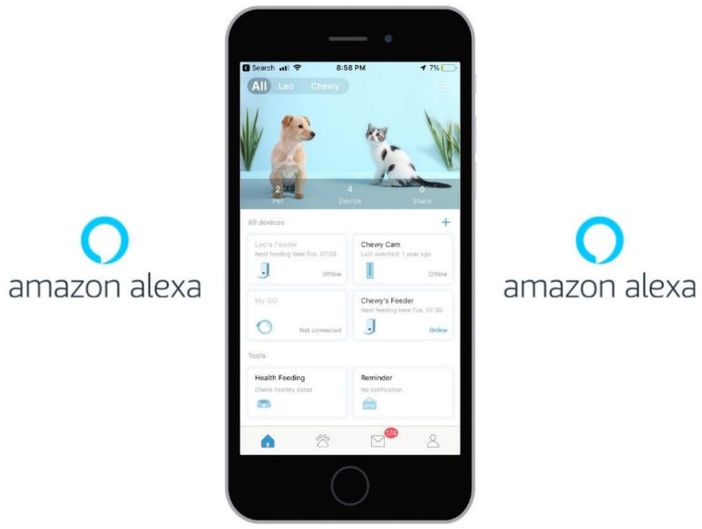

PETKIT APP

Amazon Alexa
Available Skills

PETKIT APP

Feeding Plan

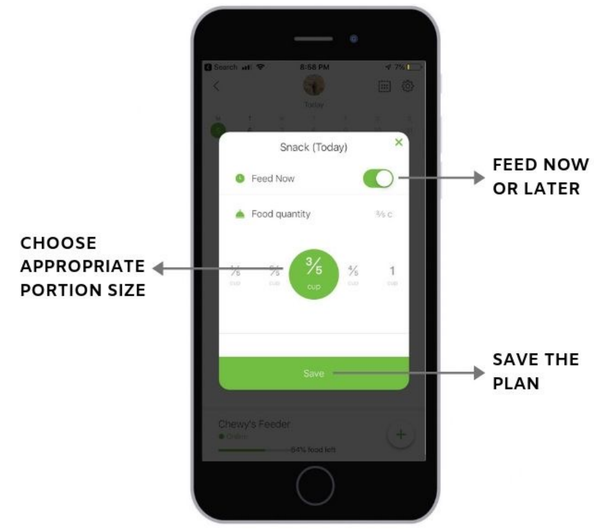

PETKIT APP

Feeding Plan

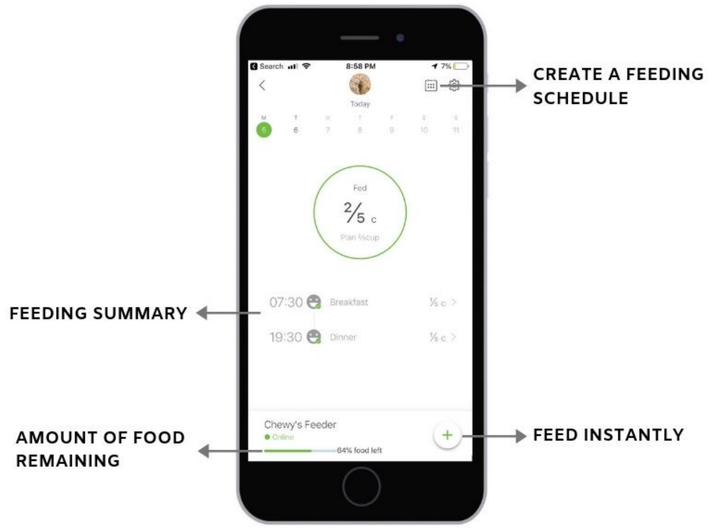

PETKIT APP

Device Dashboard

FEEDING - AUTOMATIC

INSTACHEW Smart Pet Feeder

Fresh Element Smart Pet Feeder

Fresh Element Mini Smart Pet Feeder

Fresh Element 3 Feeder

INSTACHEW SIX Feeder

AND MORE.....

PUREBITE SMART PET FEEDER

The INSTACHEW Purebite Automatic Pet Feeder combines practicality and aesthetics. This elegant pet feeder allows you to automate feeding, control portions, keep food fresh AND look good doing it! You can schedule meal times for your pet to immediately pense their food, whether you are at home or travelling. This feeder is perfect for larger pets as it has a 10 L food bin.

PUREBITE SMART PET FEEDER

FEATURES

Interactive App-Enabled Feeding:

Automatic feedings so that your pet is fed according to your set schedules. Instant Feed function allows you to feed your pet immediately from anywhere with connectivity. Download Instachew Infinite App.

Portion Control:

Full food monitoring and tacking keeps track of your pet's diet.

Enhanced Storage Capacity:

Store up to 2.8 L of food, always sealed and fresh!

Kibble Supported:

Use kibble from 5 - 35 mm in size. This is especially important for pets that use dental kibble that is typically larger than conventional kibble size.

DIMENSIONS:
PACKAGING:
8.5 X 8.5 X 13.3 INCHES

PURECHEW AUTOMATIC FEEDER

The INSTACHEW Purechew Automatic Pet Feeder combines practicality and aesthetics. This elegant pet feeder allows you to automate feeding, control portions, keep food fresh AND look good doing it! You can schedule meal times for your pet to immediately dispense their food, whether you are at home or travelling!

FEATURES

Interactive App Enabled Feeding:
Automatic feedings so that your pet is fed according to your set schedules.
Instant Feed function allows you to feed your pet immediately from anywhere with connectivity.

Portion Control:
Full food monitoring keeps track of your pet's diet and portions.

Enhanced Storage Capacity:
Store up to 2.8 L of food, always sealed and fresh!

Kibble Supported:
Use kibble from 5 - 25 mm in size.
This is especially important for pets that use dental kibble that is typically larger than conventional kibble

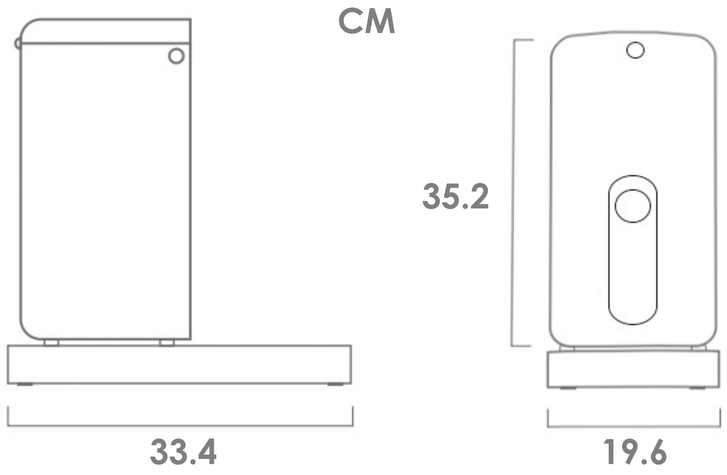

WEIGHT:
2.2 Kg

CAPACITY:
2.8 L

PET TYPE:
SMALL TO MEDIUM

INSTACHEW
SMART PET FEEDER

The INSTACHEW Purechew Max Automatic Pet Feeder combines practicality and aesthetics. This elegant pet feeder allows you to automate feeding, control portions, keep food fresh AND look good doing it! You can schedule meal times for your pet to immediately pence their food, whether you are at home or travelling. This feeder is perfect for larger pets as it has a 10 L food bin.

FEATURES

Interactive App Enabled Feeding:

Automatic feedings so that your pet is fed according to your set schedules. Instant Feed function allows you to feed your pet immediately from anywhere with connectivity.

Portion Control:

Full food monitoring and tacking keeps track of your pet’s diet.

Enhanced Storage Capacity:

Store up to 10 L of food, always sealed and fresh!

Kibble Supported:

Use kibble from 5 - 25 mm in size.
This is especially important for pets that use dental kibble that is typically larger than conventional kibble size.

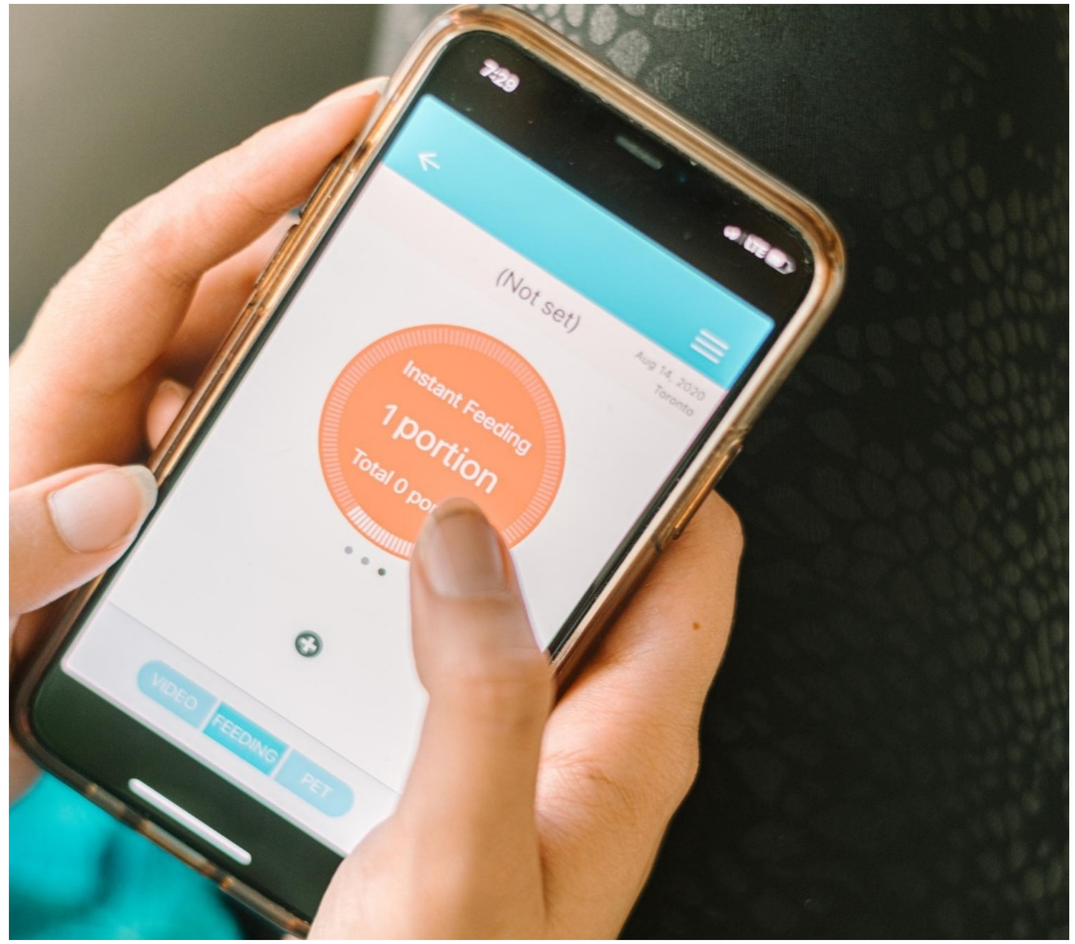

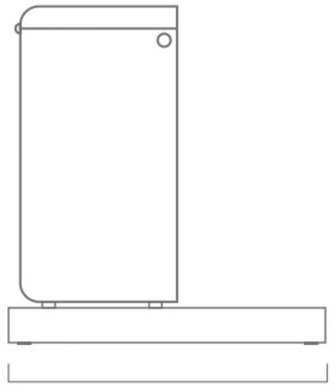

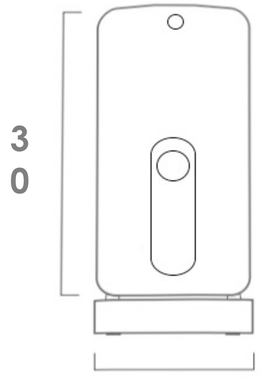

WEIGHT:
2.1 kg

CAPACITY:
4.3 L

PET TYPE:
SMALL TO MEDIUM

ADD-ONS:
Stainless Steel Food Bowl

COLOURS:

FRESH ELEMENT MINI

The PETKIT Fresh Element Mini Smart Pet Feeder is an award-winning device that ensures pet owners can stay on top of their pet's nutritional and caloric intake. The Fresh Element Mini cat and dog feeder is engineered using ten high-precision sensors to create the most reliable and easy-to-use feeding system in the market. Using the interactive PETKIT app (iPhone & Android), create a feeding schedule for your pet uniquely tailored to their needs, while an emergency power supply ensures your pet never misses a meal. The Fresh Element Mini automatic pet feeder is the perfect companion for the responsible and careful pet owner.

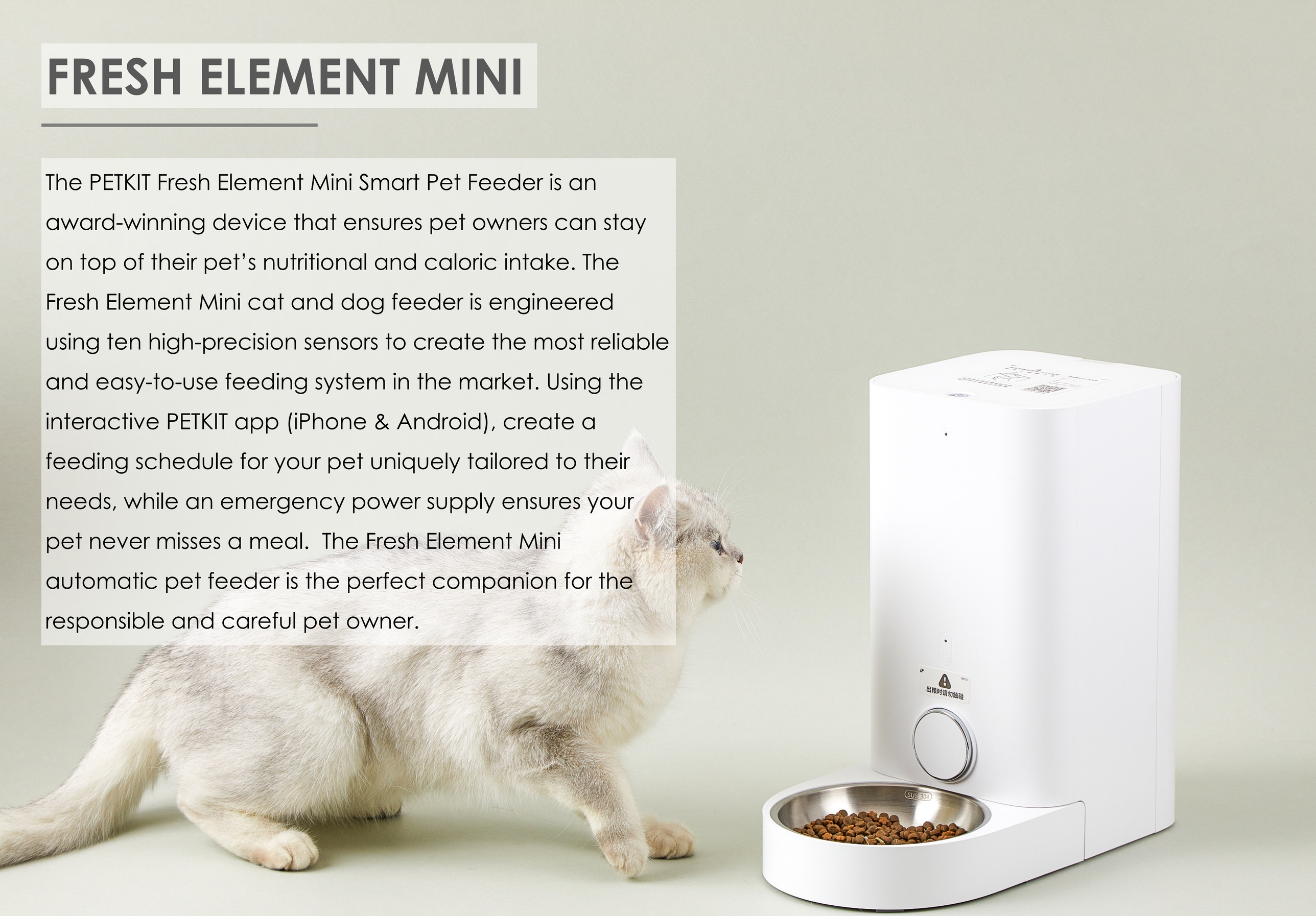

FEATURES

Interactive App Enabled:
This item has an automatic feeding system so that your pet is fed according to the schedules set; The instant feed function allows you to feed your pet immediately from anywhere in the world; This app allows you to create a unique profile for your furry friend that monitors their nutritional intake, weight, caloric intake and more.

Fresh Lock Technology:
A silicone ring seal and a replaceable moisture proof desiccant box inside the smart pet feeder keeps your pet's kibble fresh 24/7, while the dispenser locking mechanism ensures they cannot sneak any extra kibble.

Product Information:
Measures 17.5(with tray) x 8.8 x 19.7 inches; Total weight of 5kg Bucket; Capacity is 5.9 liter; Recommended for small to medium size pets like dogs and cats; Input voltage is 100to 240 volts; Output voltage: 6 volts,1 ampere; It is wireless as WiFi-enabled; Package contains 1 PETKIT Fresh Element Smart Pet Feeder and 1 DC power cord and 1 manual.

Smart Innovative & Automated Design:
It allows to follow a disciplined feeding plan to pets and be happier and healthier; This automated feeder doesn't get stuck in the dispenser like other feeders as it has the fresh element’s self adaption system utilizes an oscillating bar, spring checkboard, and silicone impeller that stops kibble from ever getting stuck; Available in White, Blue and Mini White.

WEIGHT:
2.2 kg

CAPACITY:
2.8 L

PET TYPE:
SMALL TO MEDIUM

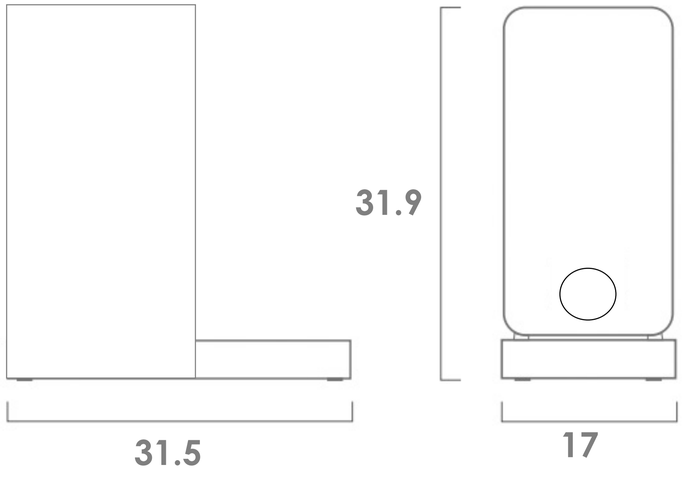

ADD-ONS:
Desiccant Packs

FRESH ELEMENT 3

The Fresh Element 3 is the newest addition in the Fresh Element Line and ensures an amazing feeding experience with portion-controlled feedings and fresh safe lock technology. Using the PETKIT app you can feed your pet immediately or set feeding cycles no matter where you are. Now pets of all sizes have a feeder that is adjustable for their needs.

FEATURES

App-Enabled:
Feed your pet anytime, anywhere with the Fresh Element 3. This automatic feeder uses the PETKIT app on your mobile device to set your pet's feeding times and portions. It will even tell you how much food is left while you are away.

Flexibility:
This feeder allows for the use of pets of different sizes as well as needs. The capsule is available in two sizes: The 3L center column can hold up to 1.5kg of kibble. The 5L center column can store food up to 2.6kg. These are perfect for cats, small and medium-sized dogs.

Superior Sanitation:
Fresh Element 3 contains food-grade 304 stainless steel in the center column and bowl. They are both easy to clean and promote better health for your pet. It can also be disassembled and easily cleaned with a damp cloth.

Enhanced Design:
The top silicone seal helps to insulate air and prevents food from going stale. There is a replaceable dry shimmer pack that prevents humidity and is moisture-proof.

The feeder dispenses your pet's kibble without getting stuck during feeding times. The center column enhanced technology houses motors and impellers to precisely portion control food for pets. The bowl rotates to distribute food evenly to prevent food from accumulating. Its front sensors detect when the pet is nearby, dispensing food when needed.

PRODUCT SIZE:
3L Center Column
5L Center Column

PETKIT FRESH ELEMENT DESSICANTS

The PETKIT Fresh Element Automated Smart Pet Feeder Replacement Desiccants keeps your pet’s food nice and fresh for consumption. Each pack comes with 5 individual packets of desiccant.

FEATURES

Keep it Fresh:

Replacement Desiccant Gel for Fresh Element. Each pack comes with 5 individual packets of desiccant. Highly hygroscopic and effectively absorbs moisture in the air.

Directions:

It is recommended that you replace the desiccant once a month (every 30 days).

INSTACHEW SIX FEEDER

A cute and compact feeder that accommodates up to 6 meals at once. Store dry and wet food at the same time for your pet. With its enhanced design, the Six Feeder will allow for pet food of all sizes to stay fresh! Its non-stick technology allows for easy clean up and sanitation to keep your pets healthy.

FEATURES

Design:

The unique design of the INSTACHEW Six Automatic Pet Feeder gives it a modern look and engineered for the sole purpose of ensuring your pet is fed consistently.

Automation:

You can use the touch key panel to adjust your pet's feeding schedule. It comes with an alarm to remind your pet and you of their feeding times.

Portions:

Each compartment can hold up to 180 ml of kibble or wet food. You can feed up-to 6 meals per day. Alternatively, you can spread the 6 meals over 2 or 3 days.

Back Up Power:

Whenever you face power outage you have not to worry the Instachew smart pet feeder is powered by 4 D cell alkaline batteries which will ensure that your pet does not miss a feeding.

Available on the App Store

ANDROID APP ON Google play

PRODUCT SIZE: L 32cm x W 32cm x H 8.2cm

FEEDING - BOWLS

Fresh Metal Bowl

Fresh
Antibacterial Bowl

Fresh
Nano

Cat Can
Holder

AND MORE.....

PURESTEEL DOUBLE PET BOWLS

Your pets can dine in style with our beautifully designed INSTACHEW Puresteel Dual Bowls. Our environmentally friendly plastic material is durable and prevents breakage with “frisky” eaters. Two bowls means double the choice, and our removable design makes cleanup a breeze!

FEATURES

Material
THE PURESTEEL Bowl is made with stainless steel which is highly durable for long-term use and healthy for your pets.

Stabliity
The Puresteel bowl has a wooden base that ensures the bowls are held in place while the pet tries to eat their food.

Design
The INSTACHEW PURESTEEL Bowl has a modern design which should fit well anywhere in your home.

WEIGHT:
2.2 lbs

DIMENSION:
13.8x6.2.6 in

PUREATS DUAL BOWLS

Your pets can dine in style with our beautifully designed INSTACHEW Pureats Dual Bowls. Our environmentally friendly plastic material is durable and prevents breakage with “frisky” eaters. Two bowls means , double the choice, and our removable design makes cleanup a breeze!

FEATURES

Dual Bowl Design

Dinner time means not having to choose between dry and wet feed with our INSTACHEW Pureats Dual Bowls! Our elegantly designed dual bowl system puts the option in your hands!

Durable Material

Our Bowls are made of environmentally friendly plastic: safe, eco-friendly, and most importantly, durable!

Removable and easy to clean!

Bowls can be detached from the tray, making transportation and cleaning a breeze!

WEIGHT:
0.4 kg

CAPACITY:
0.45 L

PET TYPE:
SMALL TO MEDIUM

COLOURS:

PUREATS PET BOWL

Inspired by the iconic Roman Column, the INSTACHEW Pureats Bowl will be a statement piece with both pets and guests! Our elevated design allows for natural posture, while providing flexibility with our removable stainless steel bowl. Easy, ergonomic, and stylish!

FEATURES

Iconic and Practical

Inspired by the Roman Column, this bowl is stylish and practical. Our removable stainless-steel bowl makes for easy cleaning. A removable top bowl also provides a hidden compartment, perfect for treats and other goodies!

Built with Ergonomics in mind

Our bowls are raised to a height of 6.5 CM, creating a more ergonomic feeding experience for your pet. A wider diameter and raised bevels prevents spillage, keeping feeding time fun and hassle free.

Easy Clean

Our removable stainless-steel bowl makes cleaning a breeze.

COLOURS:

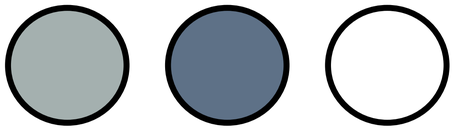

Sizing: CM

L 17 x W 17 x H 9

WEIGHT:
0.48 kg

CAPACITY:
0.45 L

PET TYPE:
SMALL TO MEDIUM

PUREGLASS BOWL

Dine with elegance with the INSTACHEW Pureglass Bowl! With a hand-blown glass design, each bowl is just as unique as your pet! Designed with practicality in mind, a diagonal edge makes accessing feed easy for your cat and two layers, gives pet owners the option to store additional items!

FEATURES

Hand Blown Glass

The INSTACHEW Pureglass Bowl is the epitome of beauty and functionality. Each bowl is hand blown and uniquely yours, no two bowls look alike!

Ergonomic Design

Bowls are raised with a diagonal opening, allowing for easy access without placing extra strain on your cat's neck.

Dual Layers

This bowl comes with two layers, providing pet owners the option of storing treats, and other goodies.

Anti-Bacterial

Glass design prevents bacteria from growing, maintaining hygiene and cleanliness

WEIGHT:
0.75 kg

CAPACITY:
0.5 L

PET TYPE: Cats
SMALL TO MEDIUM

COLOURS:

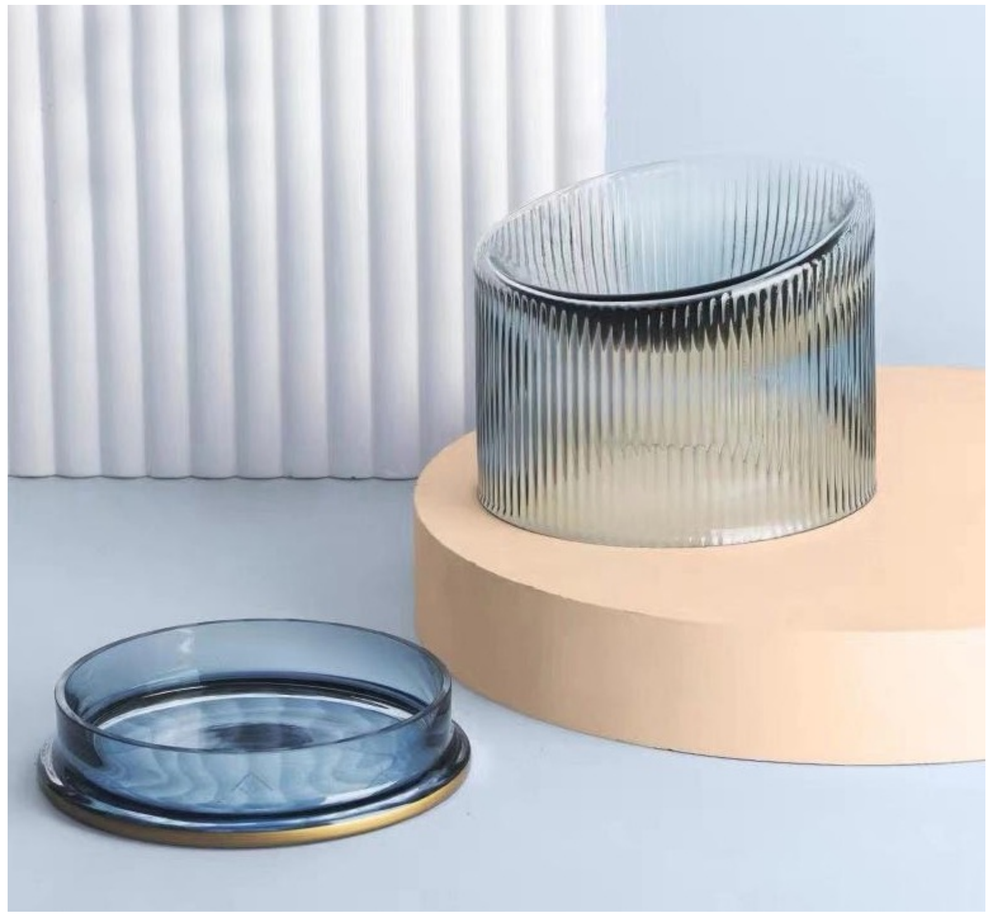

FRESH ANTIBACTERIAL BOWL

The PETKIT fresh smart anti-bacterial bowl features a built-in digital scale that tracks the weight of food in both pounds and kilograms. It also features an anti-microbial BioClean act outer shell which automatically helps eliminate a large majority of bad bacteria and germs.

FEATURES

Enhanced Weighing Technology:
Accurately measure the amount of food or water you'd like to give to your pet in 4 different units measurements (grams, ounce, pound, millimeter).

Food Tracker:
Use the PETKIT app to determine the suggested amount of food for your pet by inputting the dog's weight, food type, age, and breed.

BioClean Act:
The bowl is made with a patented anti-microbial material and a waterproof outer shell. You can easily remove bacteria from the surface of the bowl by simply washing it under the sink.

Enhanced Design:
2 AAA batteries will last you at least 1 year.
Antibacterial Material inhibits bacteria growth
Easy to clean

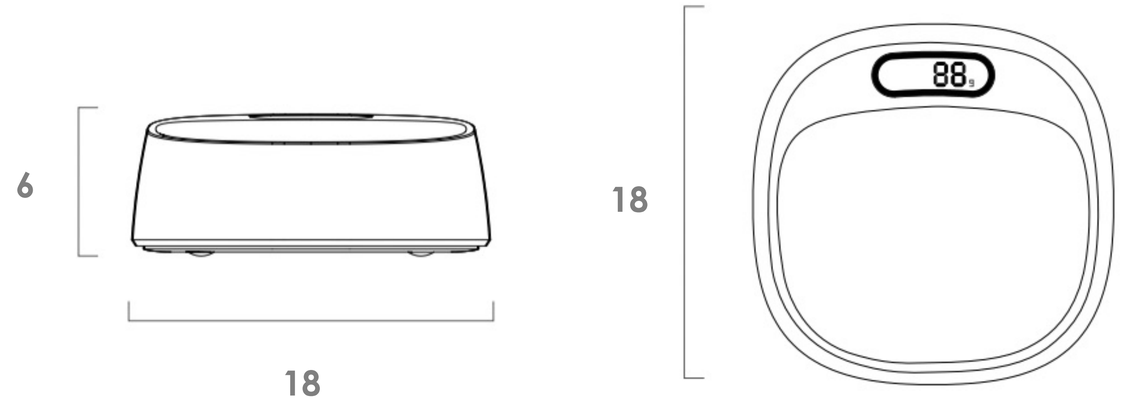

WEIGHT:
0.465 kg

CAPACITY:
0.45 L

PET TYPE:
SMALL TO MEDIUM

COLOURS:

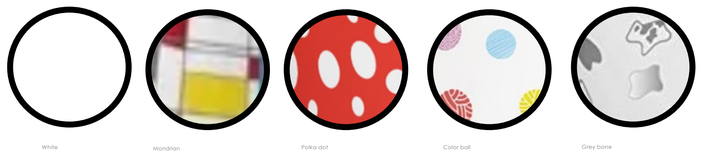

FRESH NANO STAINLESS STEEL BOWL

The PETKIT Fresh Nano Stainless SteelBowl is perfectly built for your pet. Promote a great eating posture and reduce the strain on your cat’s (or dog’s) neck with this angled bowl duo. With its large feedingarea, your cat will never worry about getting their fur or whiskers in the way of eating their food again!

FEATURES

Material:

Made of high quality and durable stainless steel material; This pet food bowl is rust and heat resistant.

Leak Proof & Skid Proof :

You can easily adjust the bowl on the base in both options tilted or flat; It will be safe and secure once locked in; 4 skid proof rubberized grips at the bottom of the base allow for proper gripping.

The amount holds:

The bowl holds about 9.5 ounces food when tilted 15 degrees.

Perfect Raised Stand:

Our fresh Nano feeding bowls are designed with a perfectly balanced raised stand which promotes eating comfort and reduce neck burden.

Easy to Clean:

The stainless bowls are removable so they can be easily washed and dried; The material used is to keep it safe from any kinds of dust and harmful things.

WEIGHT:
0.38 kg – 0.62 kg

CAPACITY:
0.27 L – 0.45 l

PET TYPE:
SMALL TO LARGE CATS

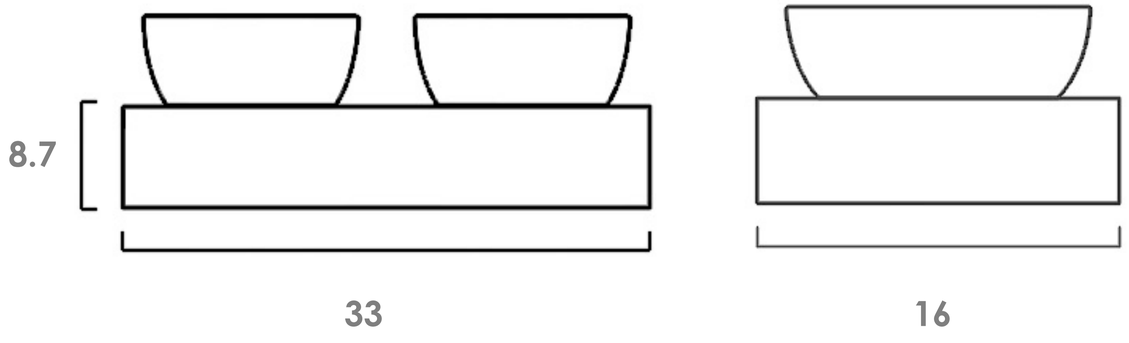

WATERMELON CERAMIC BOWL

This bowl is a little slice of ingenuity. Inspired by everyone's favorite summer fruit, it features nesting big and small bowls, allowing for easy separation of wet and dry food, or a convenient food and water setup. A cinch to wash and dry, each piece is designed to be ust the right height to never strain your cat's neck – because a comfy cat is a happy cat.

FEATURES

Design:

Sweet and refreshing watermelon-inspired, 2-in-1 slice design makes separating wet and dry food super easy!

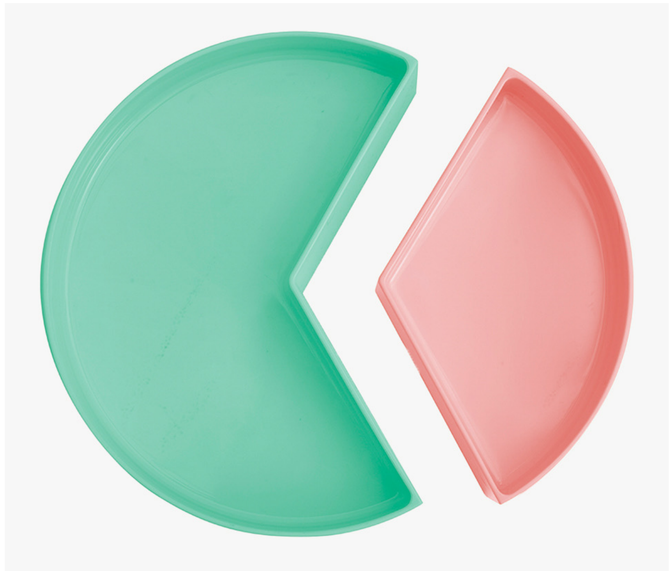

Versatility:

The perfect height for all cats of all shapes and sizes!

Quality:

Made from a high-quality ABS material built to last long!

GRAPEFRUIT CERAMIC BOWL

This set of nesting bowls is fun, fruity, and functional – it's a must-have to complete your kitty's dining experience. The nesting big and small dishes let you divide up wet and dry food, or ensure a water dish is always in reach. This fun, grapefruit-inspired piece is the most durable dish set you've ever had in your collection.

FEATURES

Design:

Sweet and refreshing watermelon-inspired, 2-in-1 slice design makes separating wet and dry food super easy!

Versatility:

The perfect height for all cats of all shapes and sizes!

Quality:

Made from a high-quality ABS material built to last long!

FRESH
NANO BOWL

What makes this bowl unique from the rest? Well, with the Fresh Nano Cat Bowl, designers have carefully studied the face shape and features of various cats. This research resulted in creating the most optimal shape and inclination angle of the bowl to help your cat built the best healthy eating habits.

FEATURES

Perfect Raised Stand:

Our fresh Nano feeding bowls are designed with a perfectly balanced raised stand which promotes eating comfort and reduce neck burden.

Easy to Clean:

The clear Nano bowls are removable, which allows them to be easily washed and dried.

Material:

Made with high quality and durable Transparent PC and ABS; This pet food bowl is rust resistant; Available in Single and Double bowl.

WEIGHT:
0.38 kg – 0.62 kg

CAPACITY:
0.27 L – 0.45 l

PET TYPE:
SMALL TO LARGE CATS

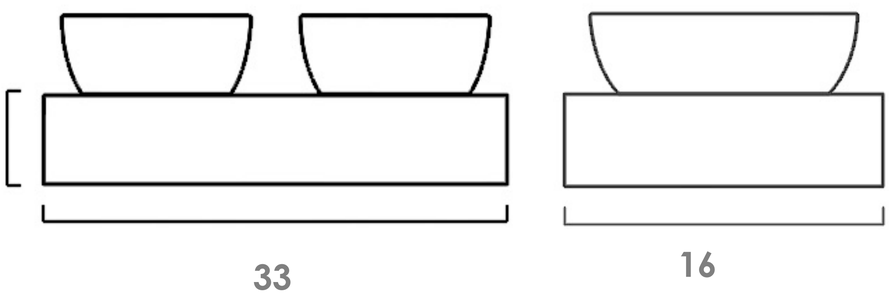

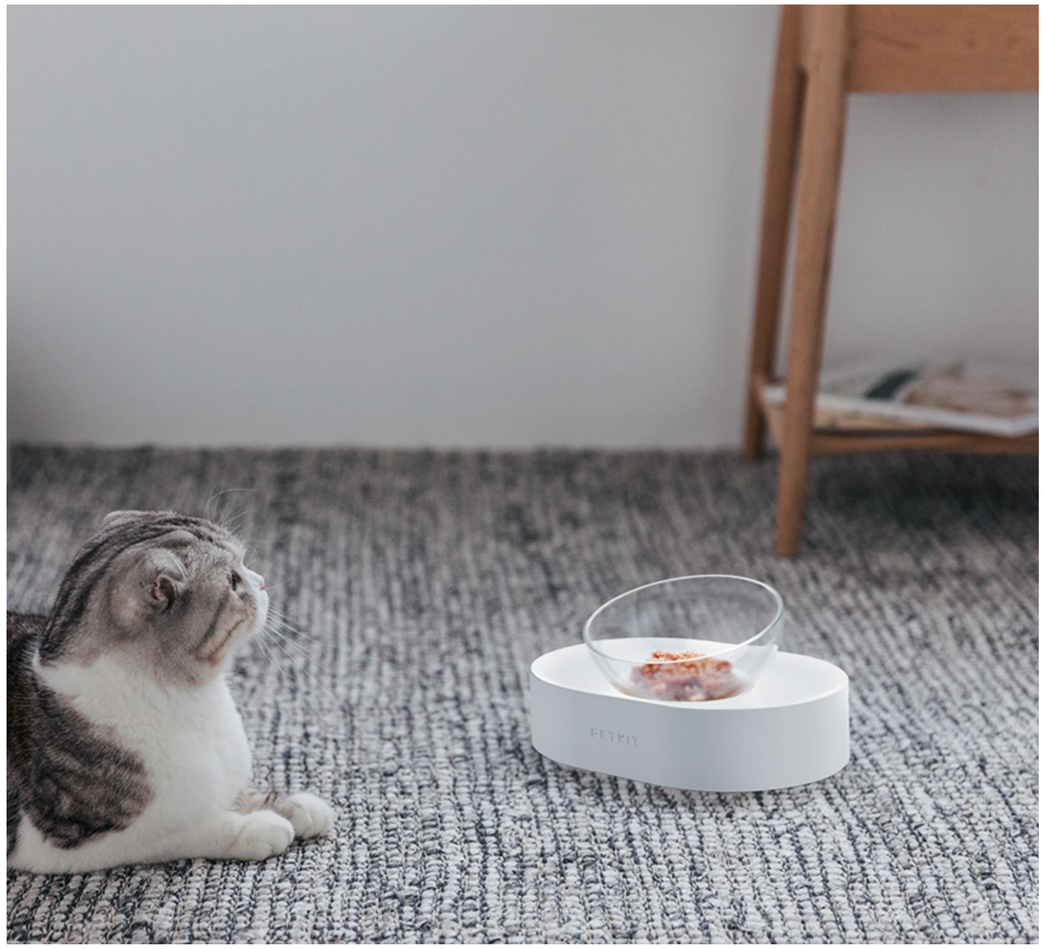

CAT CAN HOLDER

The PETKIT Canned Food Holder is an easy way to feed your cat or dog canned food in an aesthetically pleasing way! Not only is it a sleek and sturdy design, but it comes in two different sizes and three different fun colors! Feed wth ease with this pet canned food holder!

FEATURES

Ergonomic:
Designed to relieve pressure on the spine.

No Skid & Anti Spill & Mess Free:
The can holder is a perfect choice if your pet is a messy eater; Our slightly inclined design prevents your pet to mess with food; It features a skid proof rubberized grip at the bottom from proper suction.

Long Lasting and Easy Cleaning:
This can holder is made from premium grade thick silicon which makes it long lasting; The food holder is dishwasher safe and easy to clean with fast drying.

Perfect Choice for Your Pet :
This canned food holder is the perfect choice for your loving pet that will give your pet a clean, safe and enjoyable dining experience.

SMALL:

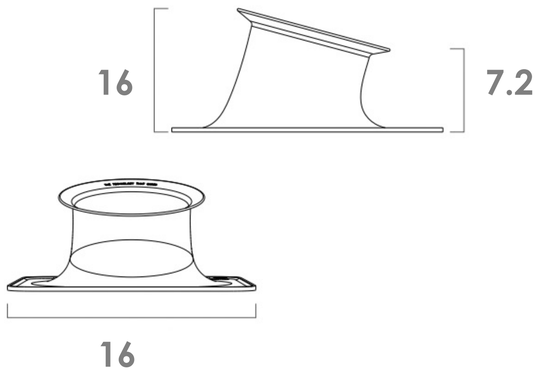

MEDIUM:

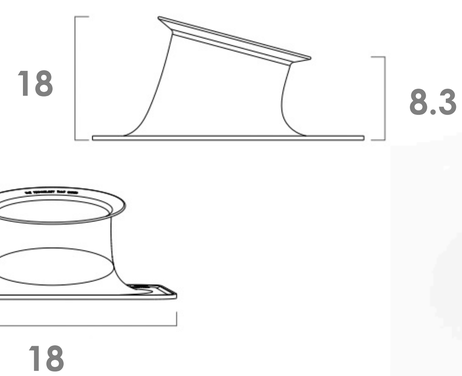

WEIGHT:
TBD

CAPACITY:
CANNED FOOD

PET TYPE:
SMALL TO LARGE CATS

COLOURS:

WATER

Eversweet Smart
Water Fountain 2.0

Eversweet
Travel Bottle

Rover
Travel Bottle

Eversweet Smart
Water Fountain 3.0

AND MORE.....

EVERSWEET SMART WATER FOUNTAIN 3.0

The PETKIT Eversweet Fountain 3.0 upgrades the longevity of the existing ultra-silent, yet powerful, Eversweet Fountain 2.0. The pump has been redesigned to be more silent, durable, and easily replaceable. Where the Eversweet Fountain 2.0 required an AC power socket, the Eversweet Fountain 3.0 can be powered via multiple sources such as; AC power socket, rechargeable portable bank, solar cell, and more. Pet parents can find comfort in knowing their pets will always remain hydrated, with this quiet and hydrating pet water fountain.

FEATURES

Reliable Design:
Eco-friendly, nontoxic, odorless, and durable.

Improved Purification System:
Filtered with mesh, water loop pulp filter, activated carbon filter; and ion-exchange-resin, and provides filtered and oxygen-enriched water. Design enables for the protection of your pet's health.

Indicators:
Will inform you to refill the water tank in time to avoid shortage of water. Otherwise, it will power off automatically. The filter indicator tells you to replace the filter regularly.

Enhanced Silent Pump:
With this silent pump you can hardly hear any sound coming from the fountain (<50DB in 40cm range).

Energy Saving:
During the day, the pump will be on for 2 minutes, and off for 1 minute. At night, the pump will be on for 5 mins and rest for 55 mins. For normal Mode, the pump is on throughout the day.

Back-up battery:
If the power goes out, five (5) AAA batteries will allow to remain ON for approximately 7 days. Alternatively, a power bank battery can be used to supply power to the fountain via a USB port.

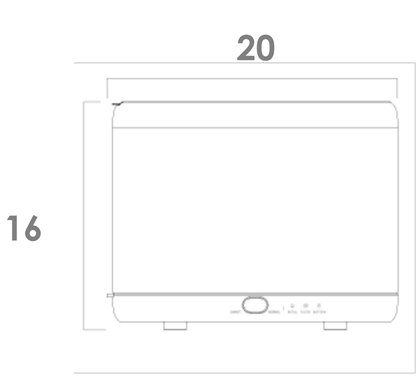

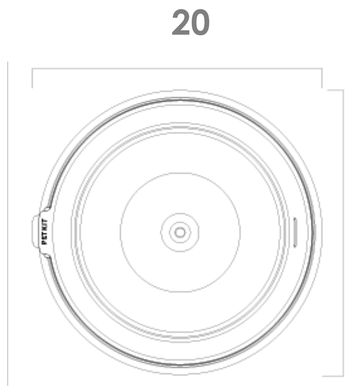

VOLTAGE:
5V

CAPACITY:
1.3 L

PET TYPE:
SMALL TO LARGE

COLOURS:

EVERSWEET SMART FILTRATION SYSTEM

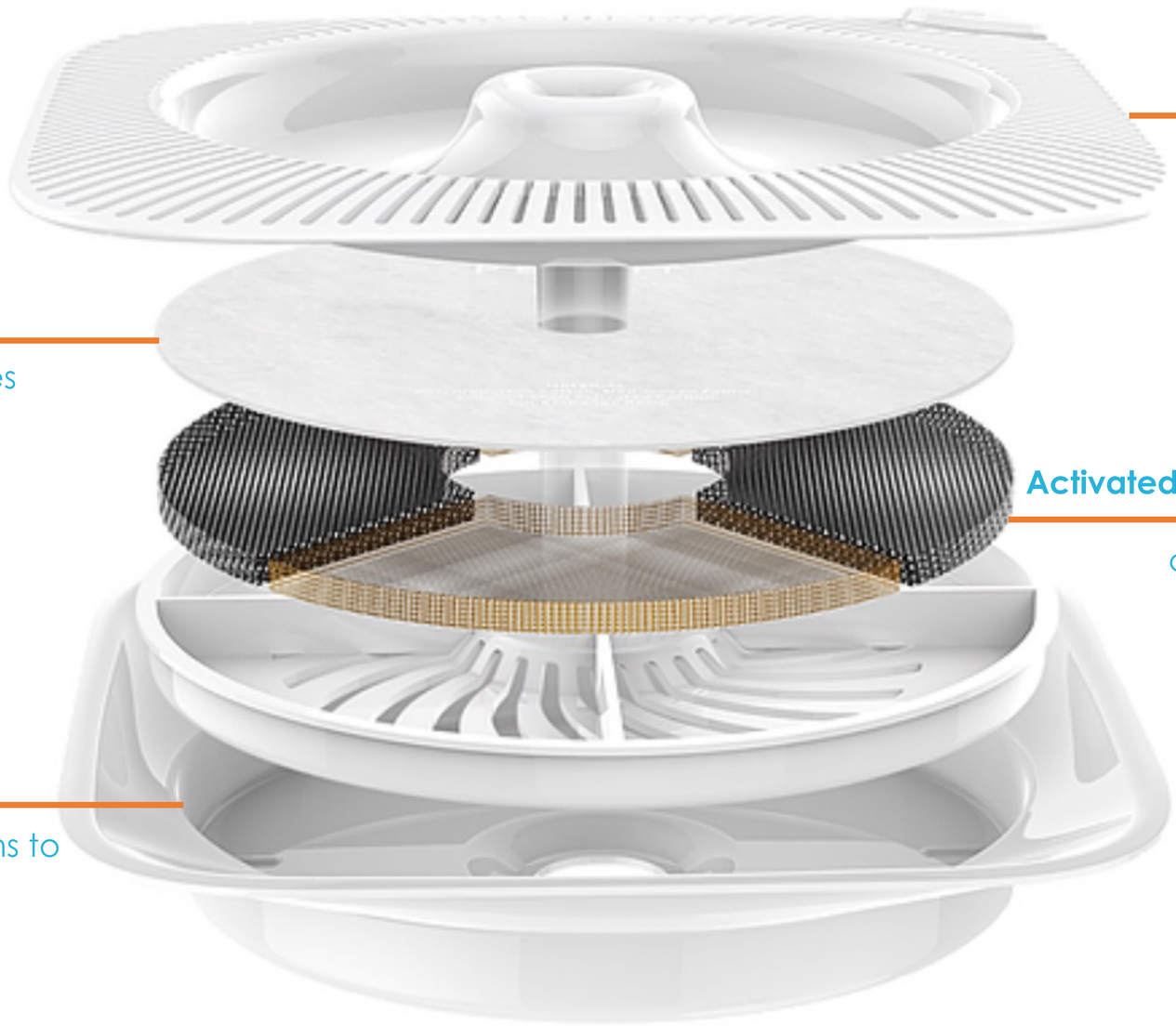

Tray Mesh

captures hairs and large debris

Filter Mesh

captures smaller impurities

Activated Carbon & Ion Exchange Resin

captures hairs and large debris

Filter Tray

Available for Gen. 1 fountains to use new filters

Note: Compatible with Eversweet Gen 2, 3 and SOLO

PETKIT Fountain Foam Filters 5 pack

This is a replacement filter for the PETKIT SMART WATER FOUNTAIN.

FEATURES

Features:

The foam filter prevents hair and debris from getting into the pump.

Important:

We recommend you change the foam filter every 2 months. Failure to replace the foam filter may result in malfunctioning of the pump and decrease water flow.

5pcs For EVERSWEET 2
For EVERSWEET 1 Working Cooperatively with PETKIT FILTER TRAY+

EVERSWEET SOLO

INSTACHEW Eversweet solo water fountain provides your pets with 1.85 liters of fresh, filtered water. This protects your pets against health which can be devastating. The dual working mode allows you to both provide water for your pets and save power. The activated carbon filter removes bad tastes and odors, keeping the water fresh. The pump is ultra-quite, and it is designed to automatically power-off when the water has run out.

FEATURES

Reliable Design:
This pet water fountain is great for small to medium sized pets; Eco friendly, nontoxic, odorless and durable; It has capacity of 1.85 litter water warm water, but not hot water.

Purification System:
The cat drinking fountain is equipped with high performance purifying filter which is composed of a cotton layer, coconut shell activated carbon, and an ion exchange resin; They form a triple filtration system to provide healthy, running, and oxygen enriched water for your pets.

Indicators:
Eversweet pet drinking fountain will inform you to refill the water tank in time to avoid shortage of water; Otherwise, it will power off automatically; The filter indicator tells you to replace the filter regularly.

Ultra Quiet and Auto Power off Pump:
This pet water fountain is ultra quiet that measured below 40 decibels and ensures that you and pet sleep great; Low energy consumption.

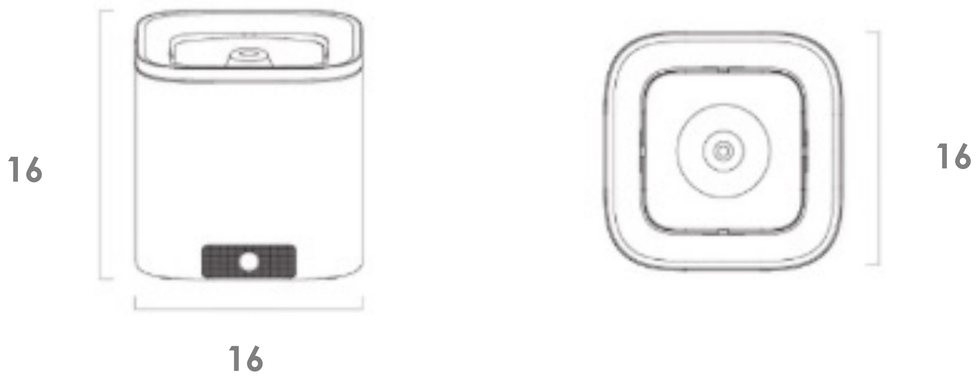

VOLTAGE:
5V

CAPACITY:
1.8 L

PET TYPE:
SMALL TO LARGE

COLOURS:

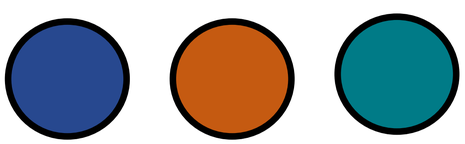

EVERSWEET
SMART WATER FOUNTAIN

The Eversweet Fountain 2.0 is an ultra-silent yet powerful pet water fountain, engineered using a 3-tier filtration system, which filters and removes harmful compounds and impurities found in water. This pet water fountain is designed with an infinity-flow concept which allows users to customize whether it flows continuously or intermittently (energy-saving mode) and keeps the water cool and fresh.

FEATURES

Reliable Design:
The PETKIT EVERSWEET PET WATER FOUNTAIN 2.0 has a 2 Liter water capacity; Eco friendly, nontoxic, odorless and durable; It can hold warm water, but not hot water.

Purification System:
This Petkit Eversweet electronic pet automatic water bowl 2.0 provides filtered and oxygen enriched water is designed for the protection of your pet's health; Filtered with mesh, water loop pulp filter, activated Carbon Filter; and Ion Exchange Resin.

Built in Sensors:
Petkit pet drinking fountain will inform you to refill the water tank in time to avoid a shortage of water; Otherwise, it will power off automatically; The filter indicator tells you to replace the filter regularly.

Ultra Silent:
You can hardly hear any sound from the fountain; You will not have any noises even in your bedroom; The unique water flow design is suitable for both dog and cats.

Energy Saving:
For this mode, the pump will be on for 2 minutes, and off for 1 minute during the day; At night, the pump will be on for 5 mins and rest for 55 mins; For normal Mode, the pump is on throughout the day.

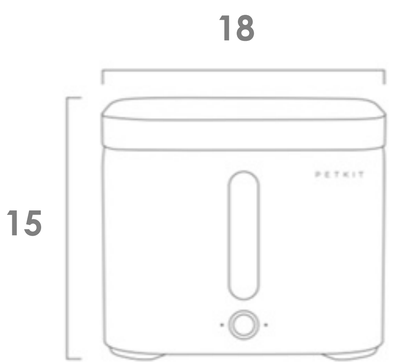

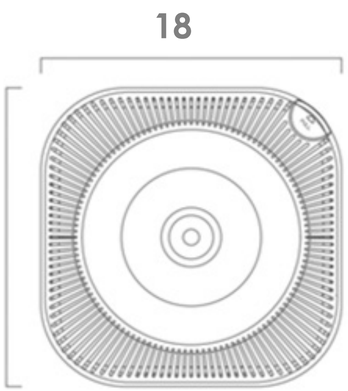

WEIGHT:
1.4 kg

CAPACITY:
2 L

PET TYPE:
SMALL TO LARGE

COLOURS:

ADD-ONS (SEE ADD-ONS SECTION):

Smart Water Warmer

Cleaning Set

Foam Filters

Filter Replacement

EVERSWEET CLEANING SET

This is a cleaning set that is used to clean to the EVERSWEET SMART WATER FOUNTAIN but can be used to clean any PETKIT products!

FEATURES

Easy to Use:

Easy way to clean your pet fountain, provide clean water to your dog or cat

Cleaning keeps your fountain operating smoothly

Made of high-quality plastic to prevent rusting.

What's included:

Includes 1 brush and 1 sponge, suitable for any cleaning cases

Holes on the handle with a ring to hang up.

PURESMART FOUNTAIN

Keeping your pets hydrated has never been so easy! Our newly designed INSTACHEW Puresmart water fountain makes drinking water fun and accessible for your pets. Wifi enabled alerts ensure a constant stream of water while our 3-stage filtration system keeps water clean and tasty! Add in Alexa compatibility and automatic eco-friendly sleep modes and you'll never view watering the same again!

FEATURES

Wi-fi and Phone Enabled
Control and customize water settings on your phone! Receive alerts when refills are needed or if filters require replacement. Alerts and our low water level alarm ensure a steady stream of clean water for your pet!

3 Stage Filtration
Our specially design 3 storage filtration system kills up to 99.7% of bacteria, ensuring safe drinking water

Smart and Silent
Built in smart battery modes ensure that the fountain remains silent throughout the day. Our smart battery modes saves power and only turns on when needed.

Optimal Tilted Water Flow

Smart Push Notifications

Triple Filtration

Temperature Control

ABS Material

Large Capacity

APP

GET IT ON Google Play

Download on the App Store

CAPACITY:
2.0 L

PET TYPE:
SMALL TO MEDIUM

ROVER TRAVEL BOTTLE

Hydrating and feeding your pets on-the-go has never been easier with the Rover Travel Bottle. The bottle is modular in design giving pet owners the flexibility to choose to carry water, food, and snacks individually or together! The bottle is easy to use and small in size making it light to carry on the move. This is beneficial to pet owners as you can hold the bottle with one hand and a leash in the other. This leak proof bottle makes long walks with your pet easy as they rehydrate on the go!

FEATURES

One-Hand Watering:

The Rover Bottle has a press and hold water dispensing button allowing for one-handed functionality. If your pets don't finish the water in the spout, simply press and hold the button and refill with the unused water.

Easy to Use:

The bowl makes it easy for your pets to drink from, as it has been designed with a drinking arc that allows dogs from all sizes and shapes to stay hydrated.

Modular:

The bottle is designed to be modular meaning that you can have a separate compartment for water and for food/snacks. You can also add additional modules as needed.

Anti-Leak:

The bottle can be locked while not in use preventing accidental leakages. Additionally, the water outlet has been designed to prevent the growth of bacteria.

WEIGHT:
0.157 kg

CAPACITY:
0.4 L

PET TYPE:
SMALL TO LARGE

COLOURS:

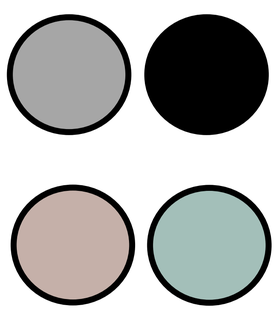

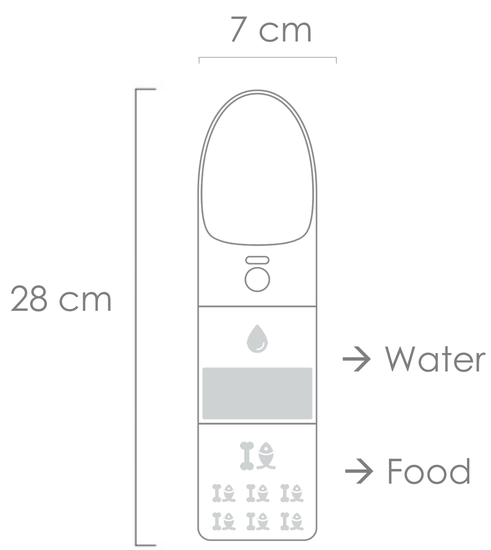

EVERSWEET SMART TRAVEL BOTTLE

The PETKIT Eversweet Travel Bottle is the perfect companion for the pet parent and pet on the go! Our uniquely designed pet bottle solves the problem of trying to give your pet clean water with only one free hand. With the carbon filter that can be purchased and added to this pet travel bottle, provide your pet water that is free of heavy metals and chlorine while on the go! This pet drinking bottle comes in five vibrant colors and features a handy string handle which can be hooked onto leashes, backpacks and more!

FEATURES

Easy to Use:

It carries up to 400ml/14 oz; Petkit portable dog water bottle comes with a bowl which makes it easy for your pets to drink from; One hand to open/lock bottle, easily feeding pet; Water button to feed water, lock button to lock water; This water bottle can be put into the backpack or hanging on hand with sling rope; One hand operation of the puppy drinking bottle.

Safe Durable Materials:

The portable dog bowl water bottle made of high-quality food grade material, BPA free, FDA approved, reliable and durable; Treat your pet to a healthy drink anytime and anywhere; 100% Healthy for your Pets and it will be a good companion for you to bring your pet out.

Portable and Convenient:

The hanging rope on the top and the suitable size of the bottle make it easy to carry or put in bag, perfect for outdoor and daily use while walking and traveling with your dog or cat; The reasonable radian design of the bottle body makes you comfortable to hold it when feeding your dog.

Leak Proof Design:

This dog water dispenser is designed with Silica gel seal ring inside the bottle body and lock key design helps to ensure that there is no water leakage, you also don't need to worry about getting your travel pack wet

WEIGHT:
0.157 kg

CAPACITY:
0.4 L

PET TYPE:
SMALL TO LARGE

COLOURS:

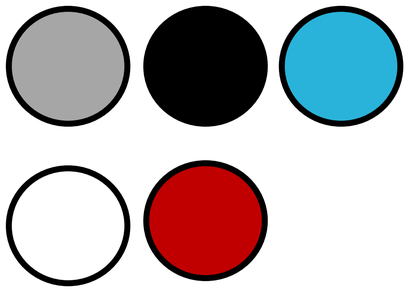

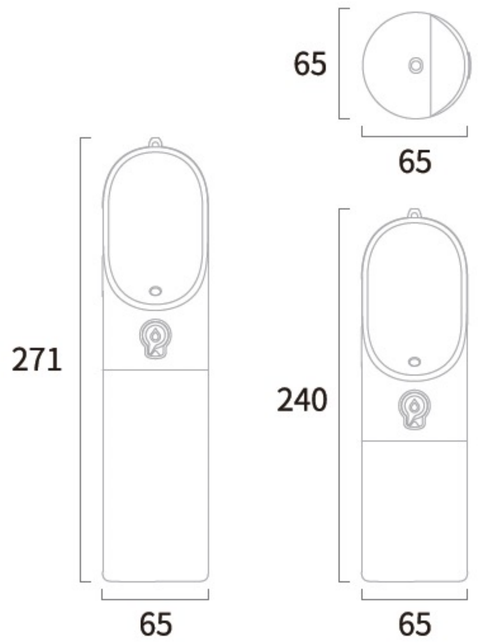

TOYS

4-in-1 Cat Scratcher

Flying Cat Scratcher

AND MORE.....

PETBOT

Take playtime to the next level with your pet's new friend! The innovative INSTACHEW Petbot provides hours of entertainment with its motion sensing camera and durable build. Play with your pet, dispense treats, and play with a variety of toy add-ons from the control of your phone! With the INSTACHEW app, the Petbot has an assortment of fun options for your pet.

FEATURES

REMOTE APP CONTROL

Take control of the INSTACHEW Petbot on the INSTACHEW app, and play with your furry friends from wherever you can.

HD CAMERA

The high-definition camera allows you to see your pet anytime you want.

TOYS INCLUDED

Play with your pet using the laser toy, or the feather to keep your pet active and engaged.

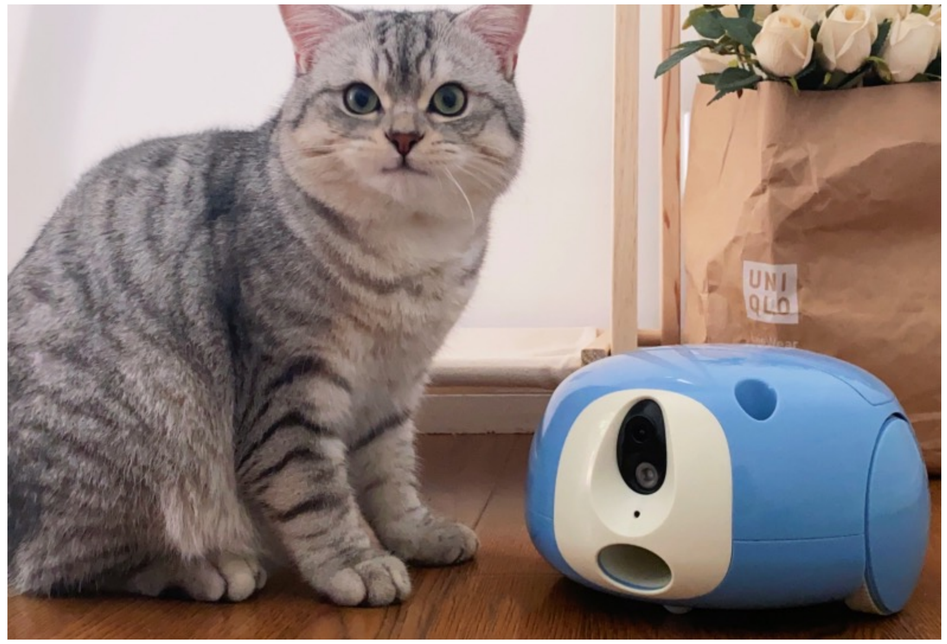

GET IT ON Google Play

Download on the App Store

PET TYPE:
SMALL TO LARGE

APP:
ANDROID, IOS

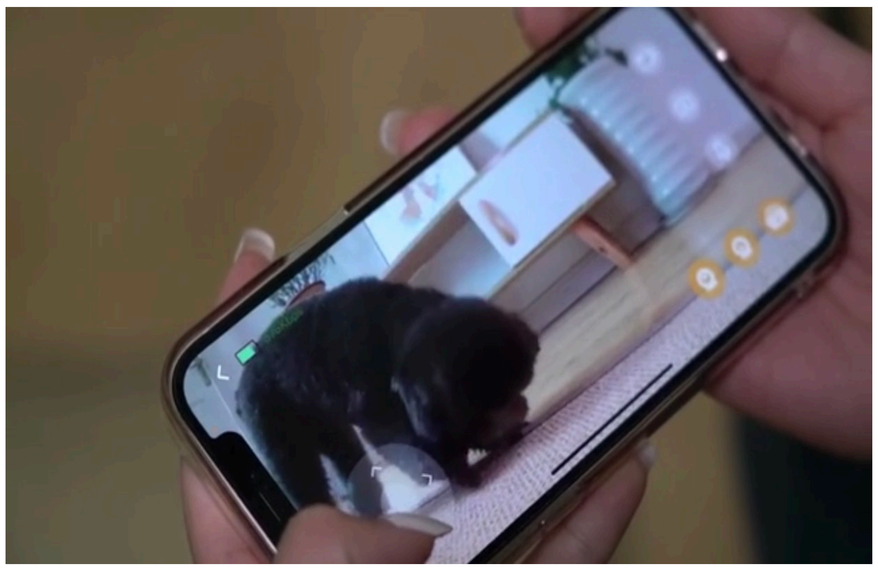

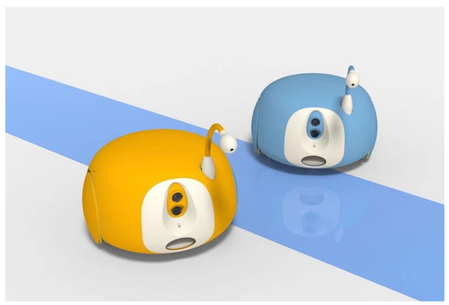

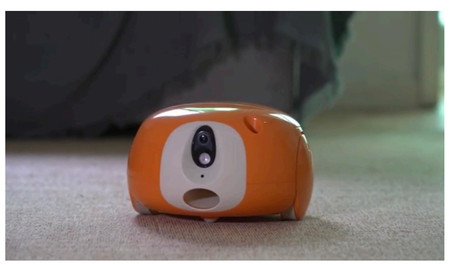

PureChase Smart Mouse

INSTACHEW'S PureChase Smart Mouse is an app enabled mouse toy for your cat to chase, while you control it remotely!

FEATURES

DESIGN
Shaped like a funny electronic mouse to attract your cat, with a double sided roller and adjustable speed!

PLUSH TOY
Replaceable plush toy!

APP ENABLED TOY
Smartphone controlled with USB charging!

DIMENSIONS:
8.3x4.3x2.4 in

WEIGHT:
2.2 lbs

4-IN-1 CAT SCRATCHER

The PETKIT 4 in 1 Cat Scratcher is designed for your cat to play, tease, smell and sleep all within one device. It comes with a base unit that can hold 2 balls and a scratchboard. Complimentary catnip is also included to sprinkle on the board. The inside of the green ball contains catnip and inside the orange ball are bells that make it super entertaining for your cats to chase and smell.

FEATURES

Bed:

This cat scratcher can not only be used as a toy, but also as a bed. The 33 cm diameter allows for your pets to take a snooze when they're done chasing the balls or scratching the board.

Toy Balls:

Keeps the senses engaged with the green and orange balls. The green ball has catnip and the orange ball has a bell.

Consumables:

The green and orange balls, and the scratch pad are all replaceable!

Durable Design:

The 4 in 1 cat scratcher comes with a corrugated board that is both solid and durable. It offers your cat a fun and healthy play experience!

ADD-ONS:
Replacement Corrugated Board

WEIGHT:
1.4 kg

PET TYPE:
SMALL TO LARGE CATS

STAIRS OF HEART CAT TREE

The Stairs of Hearts Cat Tree features a 4 step design with various heart shaped resting and recreation spots, fill you and your cats hearts with joy and love.

FEATURES

Spacious Bed Condo:

Small and Large cats can use the cat bed readily.

Stability:

The tree has a stable base, pets are safe to play.

Practical:

The tree is easy to assemble. Being practical for both the owner and the pet.

FLYING FISH CAT SCRATCHER

The stylish flying fish cat climbing rack is perfect for clawing, climbing, teasing, and more! Built with natural high-quality sisal and solid wood base, this high-quality post is made to last. Throw in easy installation, and an anti-skid bottom and watch your pet go crazy for playtime!

FEATURES

Multi-functional Fun:
The item has Multiple functions; It brings more fun for you cat; Some of functions are sharpening claws, climbing, teasing and some multiple games.

Scratching Post:
The cat scratcher made with nontoxic material. This is a 100 percent harmless cat scratcher for indoor cats!

Mental and Physical Fun:
This scratcher with flying fish toy is a great way to help your cat get much needed daily exercise and excitement.

Anti Slip Bottom:
The anti slip bottom of the scratcher makes it stable and gives your pet more comfort; It's difficult for you to move the whole scratcher board.

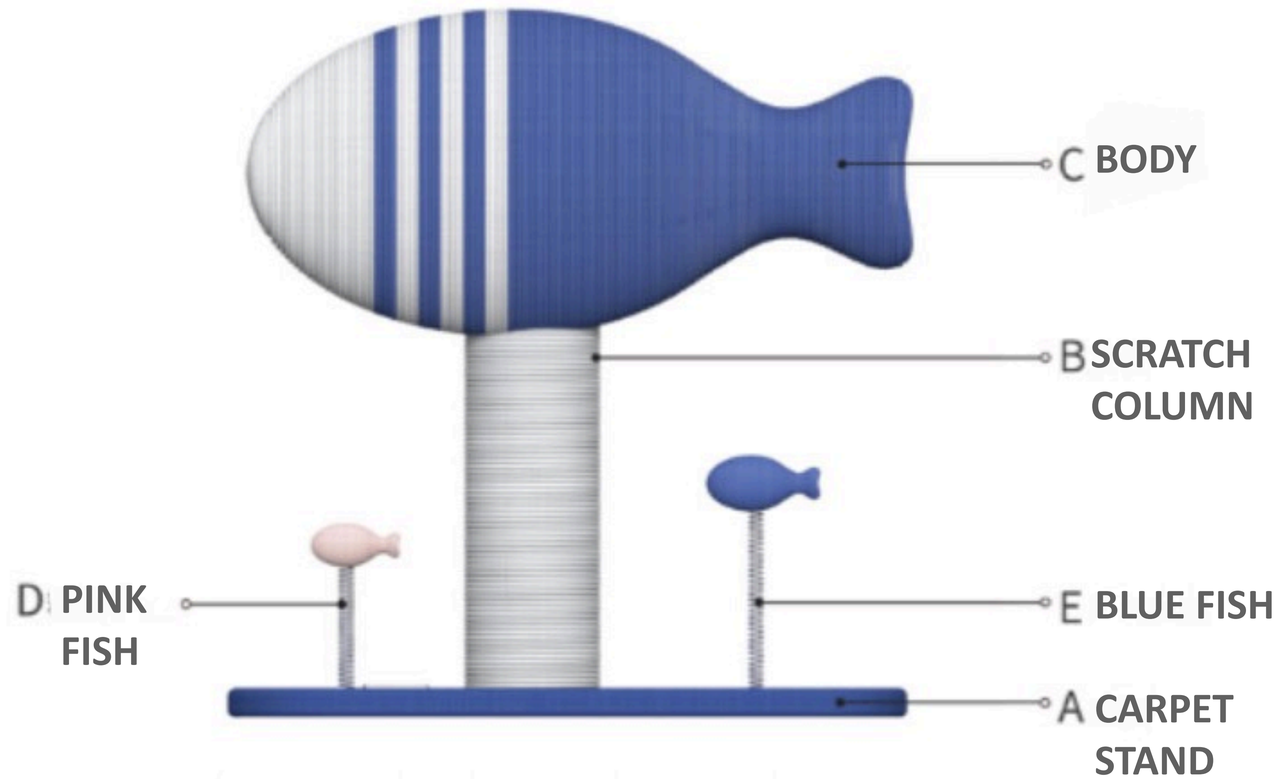

PRODUCT SIZE: L 30cm x H 40cm

LOOP CAT SCRATCHER

Your cat can enjoy 360 degrees of fun with our INSTACHEW Loop Cat Scratcher. Made with a durable material, your pet can lounge, scratch, and play to their hearts content.

With its stable and durable design, more than one pet can enjoy the loop at once!

FEATURES

Durable Scratch Surface
Our durable scratch surface is made to enjoy and is perfect for paw maintenance.

Side compartment Balls
Provide options for your pets with our side compartment balls. Scratch or bat at the balls, the option is in their hands.

Stable and Sturdy Build
Created with playtime in mind, the INSTACHEW Loop Cat Scratcher can take your cats play, no matter how tough! Sturdy material with slip proof studs are built to last!

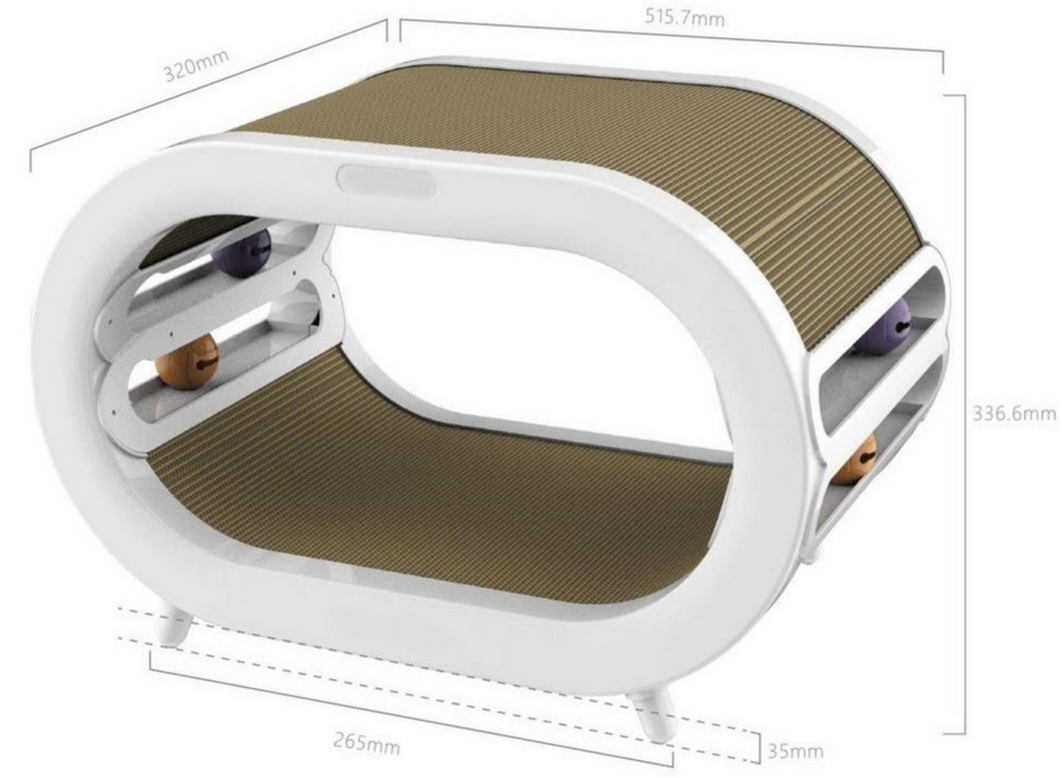

WEIGHT:
2.5 kg

MATERIALS:
ABS and corrugated cardboard

PET TYPE: Cats
All Sizes

“HAPPY PLACE” CAT TOWER

The INSTACHEW “HAPPY PLACE” Cat Tower is every cat’s dream. Made with natural wood and sisal, cats can spend the day choosing between the nest, gazebo, springboard, or multiple rest surfaces. This amazing structure can entertain multiple cats or one lucky kitty for hours. To make things better, the ‘Happy Place’ allows your cat to have the option to lounge and play all at the same time!

FEATURES

Natural Material

Made with Solid wood rattan, sisal, and acrylic, all materials have been utilized with your pet in mind! Various textures and materials incentivize play and provide multiple lounging options for your furry friend.

Play Hard

Standing at just over 1.5 M tall, the “Happy place” Cat Tower provides a multitude of surfaces and textures for your cat to experience. Watch them scale the structure, fall, and do it all over again.

Rest Well

With multiple wooden gazebos, a cashmere cloth nest, and many more surfaces, your cats can rest well on any of our great surfaces.

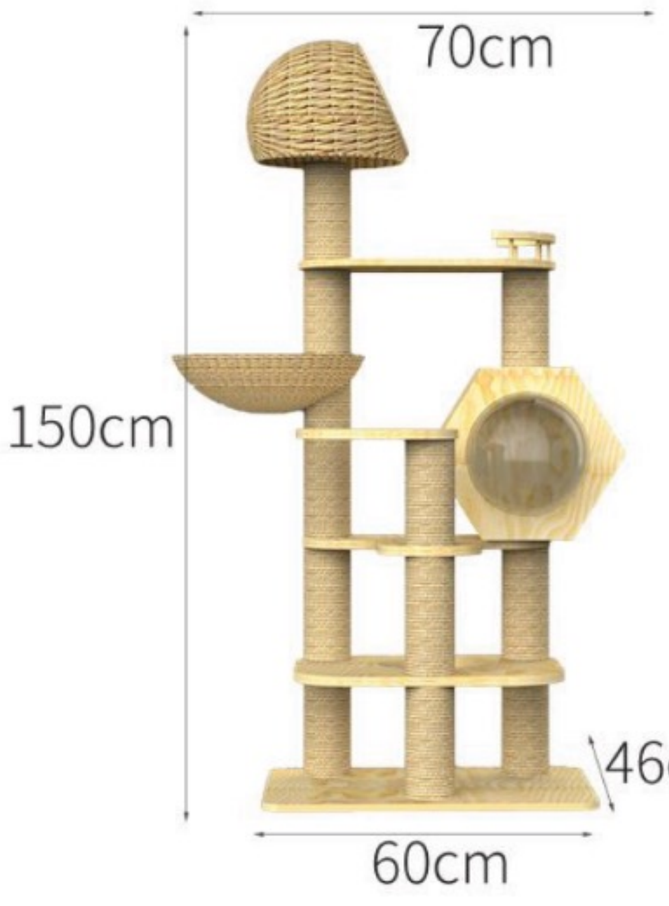

WEIGHT:
26.6 KG

MATERIALS:
Solid wood, Imitation rattan, Sisal, Acrylic

PET TYPE: CAT
SMALL TO LARGE

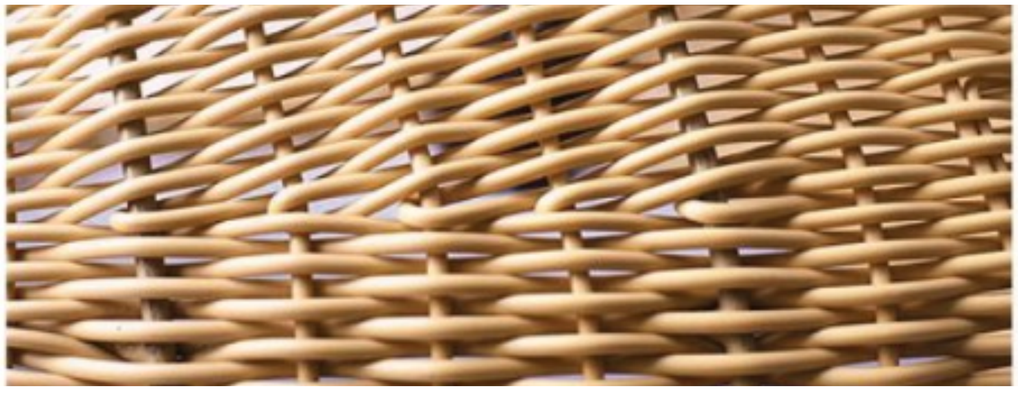

SCRATCH AND PLAY NEST

Available in three styles, the INSTACHEW Scratch and Play Nest combines play and comfort for your pet! Enjoy our hand wrapped natural sisal post and rest well in our nest platform. This is the perfect playground and rest station for your pet!

FEATURES

Natural Material

Created with durable material that's made for play! Our hand wrapped Sisal is designed to be scratched and loved by your cat and made with longevity in mind.

Play Hard

With multiple styles, our Scratch and Play Nest enables pet owners to find the perfect structure for their pet. Choose from multiple scratch post and nest designs to best suit your pet's play.

Rest Well

All play and no rest makes any pet grumpy! After your furry friend tires themselves out on the structure, take a rest in our comfortable sisal nest, the best of both worlds!

WEIGHT:
3.1 KG 3.75 KG
5.36 KG

MATERIALS:
Solid wood, Sisal, Acrylic

PET TYPE: CAT
SMALL TO LARGE

HEXAGON TOWER

The INSTACHEW Hexagon Tower accentuates layers of fun! With 4 distinct styles and multiple materials, your pet's imagination is unleashed. The pinewood and sisal string material allows your cat to climb and play for hours on end. The see through oval dome is the perfect place for your cat to rest.

FEATURES

Four Distinct Styles:

Each of our INSTACHEW Hexagon Towers includes 6 sisal pillars (we call it the pillars to a good playtime!), made for scratching. From there, customize and choose the design that best fits your pet! With a multitude of resting options and sizes, any pet owner can take advantage of this fun platform.

Play and Rest

Each of our towers is designed with flexibility in mind. Play and rest platforms come in a variety of materials and textures to suit your pet.

Sizes :

Two distinct sizes allows for single or multiple pets to enjoy the tower at the same time. Sizing flexibility works both in a small apartment and in a larger house!

WEIGHT:
Small structures: 4.8 KG Large structures: 8.6 KG

MATERIALS:
Pinewood, Sisal, Acrylic

PET TYPE: CAT
SMALL TO LARGE

CACTUS SCRATCH PAD

The INSTACHEW Cactus Cat Scratching Pad is in shape of a cactus that provides your cat daily playful recreation.

FEATURES

Handmade:
It is purely hand made, wrapped with natural sisal twine, resistant to abrasion and erosion.

Space Saving:
It is space saving that you can attach it to a wall or any smooth surface such as doors, floors, or the side of windows. It can also be easily detached and moved to anywhere you like!

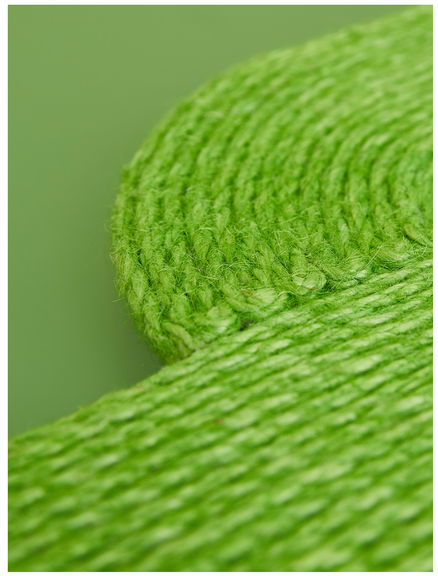

Great Exercise :
It is good to healthy nails, providing great exercise and stress reliever.

Protects Walls/Doors :
It protects your walls and doors by offering your cats a better alternative to dig their claws in!

Fun and Visually Appealing :
It can also be a fun decoration piece anywhere in your home!

ORANGE SCRATCH PAD

The INSTACHEW Orange Cat Scratching Pad is in shape of an orange that provides your cat daily playful recreation.

FEATURES

Handmade:
It is purely hand made, wrapped with natural sisal twine, resistant to abrasion and erosion.

Space Saving:
It is space saving that you can attach it to a wall or any smooth surface such as doors, floors, or the side of windows. It can also be easily detached and moved to anywhere you like!

Great Exercise :
It is good to healthy nails, providing great exercise and stress reliever.

Protects Walls/Doors :
It protects your walls and doors by offering your cats a better alternative to dig their claws in!

Fun and Visually Appealing :
It can also be a fun decoration piece anywhere in your home!

PLAZY CAT PLATFORM

Is it a toy? Is it a bed? No, it’s the INSTACHEW Plazy Cat Platform! Our newly designed scratch platform packs a ton of fun for your cat in a small space, talk about versatile! The thick string material is perfect for your cats to scratch, climb and play. The see-through oval dome is a great place for your pet to rest or for photo opportunities!

FEATURES

Rest and Recover

Our hemispherical transparent cover is the perfect lounging area for pets and pet parents! Watch your adorable pet rest after a play session, and added transparency makes for great photo opportunities!

Scratch away

Our hand wrapped sisal columns and bridge provides tons of play options for your cat! Scratch, jump, and play to your liking.

Innovative layout:

Our unique layout is sure to invoke your cat's curious side. Watch your furry friend explore and play to their hearts content with our 2 distinct designs.

WEIGHT:
10.5 KG , 9.2 KG

MATERIALS:
Pinewood wood,, Sisal, Acrylic

PET TYPE: CAT
SMALL TO Medium

WATERMELON CAT SCRATCHER

The INSTACHEW Watermelon Cat Scratching Pad is in shape of a watermelon that provides your cat daily playful recreation.

FEATURES

Handmade:
It is purely hand made, wrapped with natural sisal twine, resistant to abrasion and erosion.

Space Saving:
It is space saving that you can attach it to a wall or any smooth surface such as doors, floors, or the side of windows. It can also be easily detached and moved to anywhere you like!

Great Exercise :
It is good to healthy nails, providing great exercise and stress reliever.

Protects Walls/Doors :
It protects your walls and doors by offering your cats a better alternative to dig their claws in!

Fun and Visually Appealing :
It can also be a fun decoration piece anywhere in your home!

CHEESE CAT SCRATCHER

The INSTACHEW Cheese Cat Scratcher perfectly presents its shape in a piece of cheese. It is not only a house and scratcher for your cat, but also a fun and visually appealing home decoration that will look great in any corner of your home!

FEATURES

2 in 1 House with Corrugate Scratching Board:
Provides a private place for your cat to rest and play!

Perfect for Hiding Instinct:
It features several big holes for your cat tog et in and out!

Great Exercise :
It is good to healthy nails, providing great exercise and stress reliever.

Protects Walls/Doors :
It protects your walls and doors by offering your cats a better alternative to dig their claws in!

Fun and Visually Appealing :
It can also be a fun decoration piece anywhere in your home!

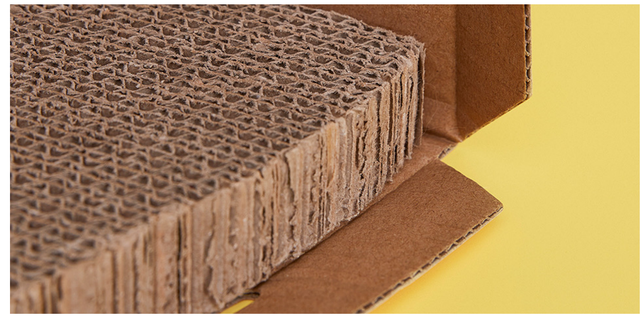

Cactus Cat Tree

The INSTACHEW Cactus Cat Tree is a cat climber and scratcher in the shape of a cactus, that provides your cat daily playful recreation.

FEATURES

Hand Made:

It is purely hand made, wrapped with natural sisal twine, resistant to abrasion and erosion.

Fun and Visually Appealing:

It can be a fun and visually appealing decoration that adores your home.

Different Sizes :

The larger is 41 inches, tall enough for climbing, while the smaller is 31 inches, better for pawing and scratching.

SIZE:
SMALL to LARGE

CAT ATTACK SCRATCH PAD

CAT ATTACK! Take playtime on the go with our INSTACHEW cat attack scratch pad. Our strong suctioned design allows your pet to play on the ground or on any smooth wall surface. Durable wrapping ensures longevity after plenty of scratch sessions.

CAT ATTACK SCRATCH PAD

FEATURES

Hand Made:

It is purely handmade, wrapped with natural sisal twine, resistant to abrasion and erosion.

Non-Slip Design:

The Cat Attack Scratch pad is designed perfectly for your cats to play and scratch as they please without the product slipping away. The scratch pad has suction cups on the bottom making it easy to place anywhere the suction cups will stick to.

DIMENSIONS:
17 x 0.71 x 17 (INCHES)

WEIGHT:
2 (LBS)

MATERIALS:
Solid Wood Paint-free board, Sisal

PET TYPE:
CAT SMALL TO LARGE

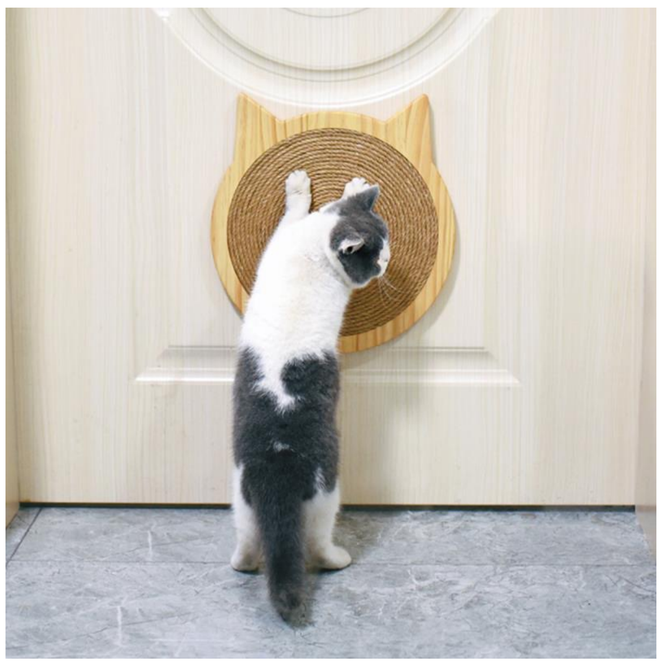

SNEAK ATTACK CAT TOY

The INSTACHEW Sneak Attack Cat Toy is perfect to keep your cat entertained for quite a bit of time. Ever seen your cat trying to grab something from under the pillow or in between the couch? Well, this toy will give a quick swipe of a feather that will entice your cat to reach and grab.

SNEAK ATTACK CAT TOY

FEATURES

Interactive:

This electronic toy can provide hours of activity for your cat by attracting
it's interest in playing. The toy does all the moving meanwhile the cat does all the chasing!

DIMENSIONS:
9.65 x 9.45 x 2.52 (INCHES)

WEIGHT:
1.01 (LBS)

HOURGLASS CAT SCRATCH TABLE

Make a statement with this playful cat post! The INSTACHEW hourglass cat scratch table is fun for your cat and the family. Watch your pet enjoy the unique Sisal design while enjoying a cup of tea on the top platform. With its unique design, playtime has never been so eye catching!

FEATURES

Fun and Practical

A tea table for you and a scratching post for your pet! The INSTACHEW Hourglass scratch table combines teatime with playtime. With its stable base and hand wrapped scratching post, you can enjoy watching your cat play without worries of spillage!

Unique Design

Our unique spherical post design is sure to delight your furry friend. A hand wrapped sisal base and post provides multiple play options for your pet.

MATERIALS:
Solid Wood Paint-free board, Sisal Hemp, Tempered Glass

PET TYPE: CAT
SMALL TO LARGE

CHERRY CAT SCRATCHER

The INSTACHEW Cherry Cat Tree is a cat climber and scratcher in the shape of a cherry, that provides your cat daily playful recreation.

FEATURES

Hand Made:

It is purely hand made, wrapped with natural sisal twine, resistant to abrasion and erosion.

Aesthetically pleasing :

Beautiful cherry blossom tree can be an attractive décor for your pet within your home.

Easy to Assemble:

It is easy to assemble, but solid enough for an adult to scratch and climb.

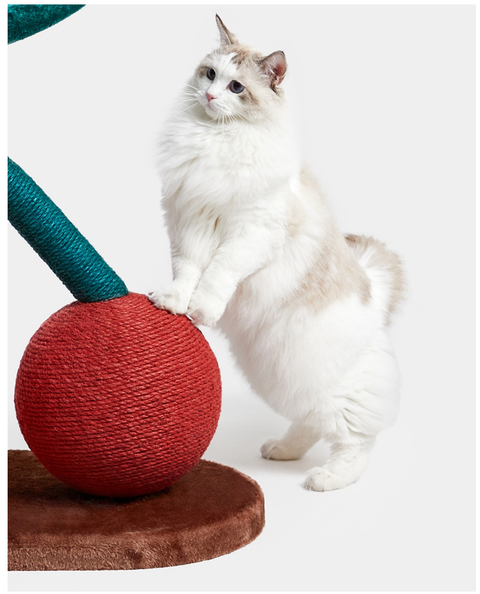

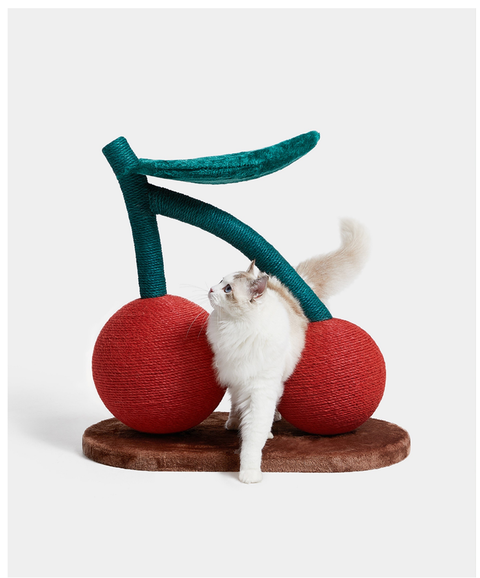

CHERRY BLOSSOM CAT TREE

The INSTACHEW Cherry Blossom Cat Tree is a cat climber and scratcher in the shape of a cherry blossom tree, that provides your cat daily playful recreation.

FEATURES

Hand Made

It is purely hand made, wrapped with natural sisal twine, resistant to abrasion and erosion.

Easy to Assemble

It is easy to assemble but solid enough for an adult cat to scratch and paw.

Aesthetically Pleasing

Beautiful cherry blossom tree can be an attractive décor for your pet within your home.

DIMENSIONS:
14 X 14 X 34 (INCHES)

WEIGHT:
11 (LBS)

PET TYPE: CAT
SMALL TO LARGE

FUN TREES

The PETKIT Fun Tree Dog Toys are the perfect way to keep your dogs' teeth clean while having fun! With its two different size options and fun color scheme, the Fun Tree Dog Toy set is perfect for dogs of all breeds, ages, and sizes, and can be used for co-playing and independent playing.

FEATURES

Teeth Cleaning:
The bumps on the Fun Tree toys help the dogs keep their teeth clean.

Playing:
The Fun Tree can be used to play fetch! Keep your pets healthy and active by throwing the Fun Tree around for them to catch.

Safe & Durable:
Fun Trees are manufactured with premium grade rubber and no chemical smells. Additionally, the material allows for the toys to retain their shape during bouncing around during play. The Fun Tree is also bite-resistant and indestructible.

Easily Cleaned & Stored:
Simply wash the ball and allow for it to dry. Once dried you may use the Fun Tree as home decor or simply store away with the rest of your pet's toys.

SMALL:

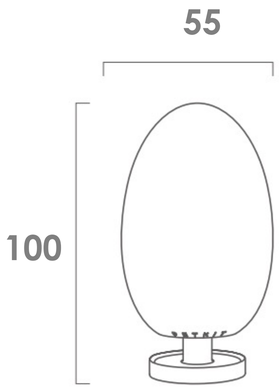

MEDIUM:

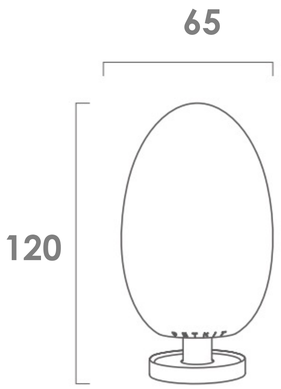

WEIGHT:
0.5 kg

PET TYPE:
SMALL TO LARGE DOGS

COLOURS:

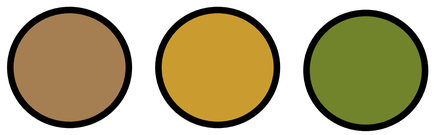

BINGO CAT TEASING

Everyone's a winner with the Bingo Cat Toy! A bendable design combined with a dexterous toy tip ensures that playtime is never boring.

FEATURES

Compact Design:

The Bingo Cat Toy is detachable and collapsible. Take play on the go!

Furry Fun:

The specially designed tip features a soft furry ball with extendable fabric. Multiple textures and movement to excite your pet!

Ergonomic Grip:

The handle is ergonomically designed for comfort when playing. A detachable design also makes cleaning a breeze!.

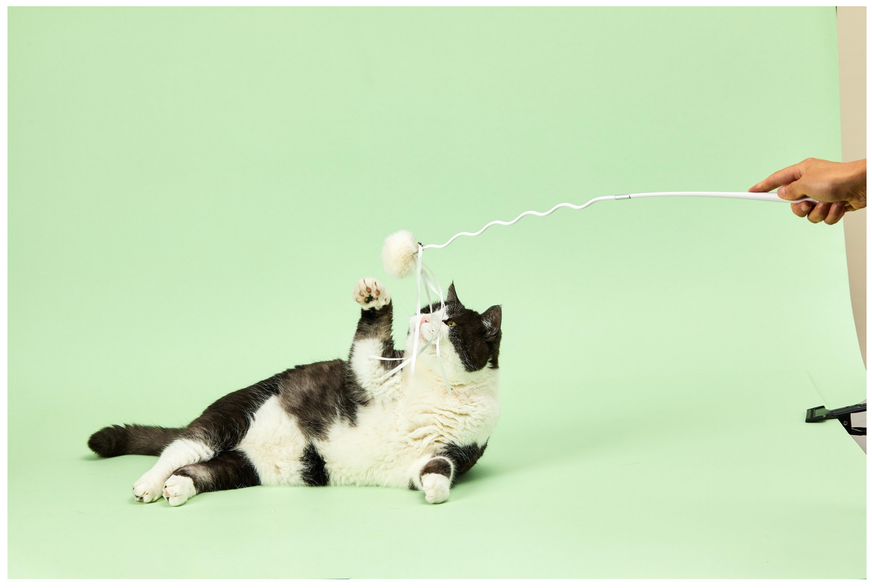

LIVING – *SMART*

Cozy Smart
Cat Cave

COZY SMART PET HOME

Want to provide the optimum temperature for your pet to rest in? The PETKIT Cozy 2.0 is a smart pet cave designed for the pet that likes to relax in style! The Cozy Smart Pet Cave is a cat house or small dog house engineered to provide impeccable comfort and temperature control. Using the interactive PETKIT app, create a unique profile for your pet in order to track their sleep cycles and resting periods. Customize the internal temperature of the Cozy to provide insulation in the winter and seamless air conditioning in the summer.

FEATURES

Interactive App:

With a high precision temperature and humidity sensor, you can set the temperature so that it is either cool or warm depending on your pet's preference using the PETKIT app.

Sleep Cycle Monitoring:

The Cozy Smart Pet Cave comes with an infrared sensor that detects whether your pet is in their cave or not. Once your pet is inside, it will record your pet's resting time, providing you with valuable data to share with your vet.

One of a Kind Design:

The Cozy has been designed in such a way that can be aesthetically pleasing when placed in your home. The base has been designed to collect condensate ensuring that your pet is in a clean and dry environment.

WEIGHT:
5.1 kg

PET TYPE:
SMALL TO MEDIUM CATS/DOGS

RATED POWER:
17.4W/2900MA

CONNECTIVITY:
WIFI

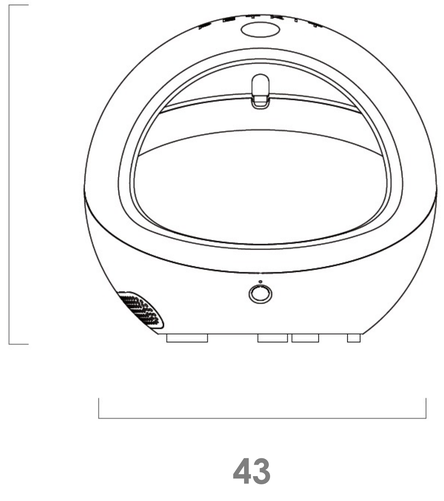

GET IT ON Google Play

Download on the App Store

PURESIGHT 360

The INSTACHEW Puresight 360 carries a contemporary design to compliment any home aesthetic while delivering optimum security and safety to your home and comfort and care for your pet to be able to interact.

FEATURES

Camera Movement:

- 1/2.7" 2MP(1080P) CMOS sensor & 3.6mm HD Fixed Lens
- Pan 355° & Tilt 110°
- Motion detection & motion auto tracking
- Night vision
- Infrared distance (8-10m)
- Wide dynamics, image flipping, 3D noise reduction

Real-Time Video:

- 2 way voice, alarm, real-time video

Storage Capacity:

- Max 128G card & cloud storage

PURECONNECT SMART PLUG

The INSTACHEW Pureconnect Wi-Fi Enabled Single Smart plug allows you to convert any of your pet products into smart products!

PURECONNECT SMART PLUG

FEATURES

App Controlled:

With the INSTACHEW Pureconnect Smart Plug you can easily be in control of your electronics using your smartphone to turn it on/off, schedule feedings, set timers and more!

Compatibility:

Compatible with Amazon Alexa.

Design:

The INSTACHEW Pureconnect is not bulky and saves space!

PURECONNECT+ SMART PLUG

With the INSTACHEW PureConnect+ Wi-Fi Enabled Smart Plug with USB connectivity, you can now convert any of your pet products into smart products!

SMART INFINITY SERIES
APP-ENABLED

PURECONNECT+ SMART PLUG

FEATURES

App Controlled:

You can be in control of your electronics using your smartphone to turn it on/off, schedule feedings, set timers and more!

Compatibility:

Compatible with Amazon Alexa.

Design:

The INSTACHEW Pureconnect+ is not bulky and saves space providing a plug in and USB port options.

LIVING - BEDS

Cooling Bed

Deep Sleep
Pet Mattress

All Season Bed

Deep Sleep
Cat Bed

Pineapple Bed

AND MORE.....

ROCKABYE PET BED

Soak in the sun and rock your pet’s world with Instachew’s rockabye pet bed. Our soft innovative design is the perfect surface for any pet to lounge and relax.

FEATURES

Easy to Clean:

The sleeping pad is removable and easy to wash with an innovative sleeve design

Design:

The bed's design provides your pet with absolute comfort with its soft cushion and guard rails. Pets can rock away without fear of falling.

Pet Play:

The INSTACHEW Rockabye pet bed incentivises pet interaction with its built-in rocking!

WEIGHT:
5.5 Kg

PET TYPE:
SMALL TO MEDIUM CATS/DOGS

Material:
Bamboo, Solid Wood Composite Board.

SAUCER CAT BED

Our fun and quirky flying saucer themed bed is sure to captivate your pet and guests! Talk about, out of this “Purr” To make things better, the see-through dome allows your pet to see everything around them making for the cutest photo opportunities.

FEATURES

Unique Design

The handmade rattan nest with an acrylic dome provides a unique comfortable design to this cat bed. Sturdy legs and a transparent dome make for a fun playtime and plenty of photo opportunities!

Easy to Clean:

No cushion/fabric material makes cleanup easy!

WEIGHT:
n/a

PET TYPE:
SMALL TO MEDIUM CATS/DOGS

Materials:
Imitation Rattan, Acrylic, Solid wood

LULLABY PET BED

Stylish, comfortable, and sure to “rock” your cat’s world. The INSTACHEW Lullaby Pet Bed provides a comfortable cotton plush nest pad with a stable frame, creating a great rest experience for your cat.

FEATURES

Plush Nest Pad

Made with plush fabric and PP cotton, our custom nest pad is designed for maximum comfort

Stylish and Sturdy

Stylish and easy to clean!

Pet Parent Interaction

Built in rocking chair inspiration incentivises play between pet parent and pet! Rock your pet to sleep.

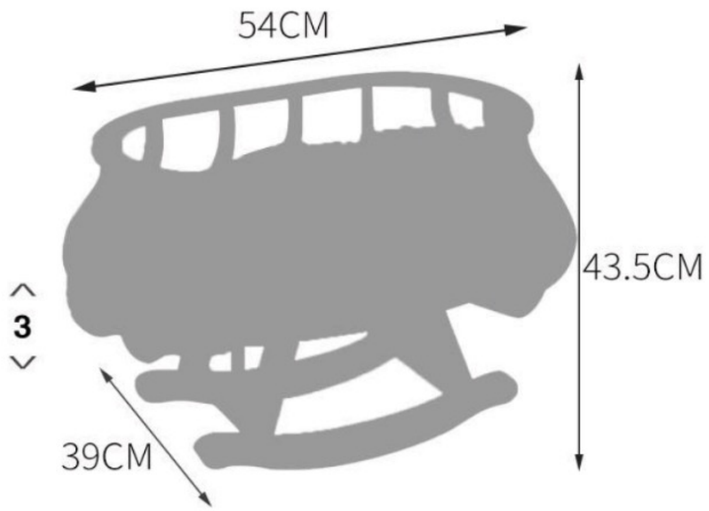

PET TYPE:
SMALL TO MEDIUM CATS/DOGS

Materials:
Bamboo Wood, Plush, Fabric, pp Cotton

GLOBAL CAT BED

The INSTACHEW Global Cat Bed puts your pet's play and rest at the center of your world. Watch this unique design spark your cat's curiosity.

FEATURES

Unique Design

The hand made rattan nest with an acrylic dome provides a unique comfortable design to this cat bed. Sturdy legs and a transparent dome make for a fun playtime and plenty of photo opportunities!

Easy to Clean:

No Fabric, no mess! Cleaning up with the INSTACHEW Global Cat Bed is easy!

360 Exposure

Look at playtime in a whole new light! The completely transparent design provides a clear view of your pet during play and rest!

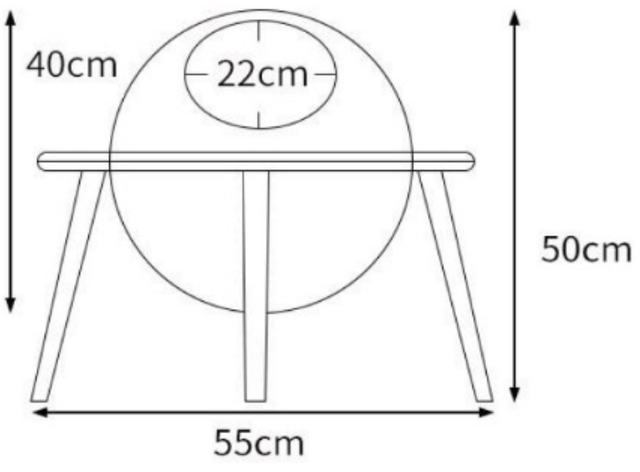

PET TYPE:
SMALL TO MEDIUM CATS

Materials:
Pinewood, Acrylic

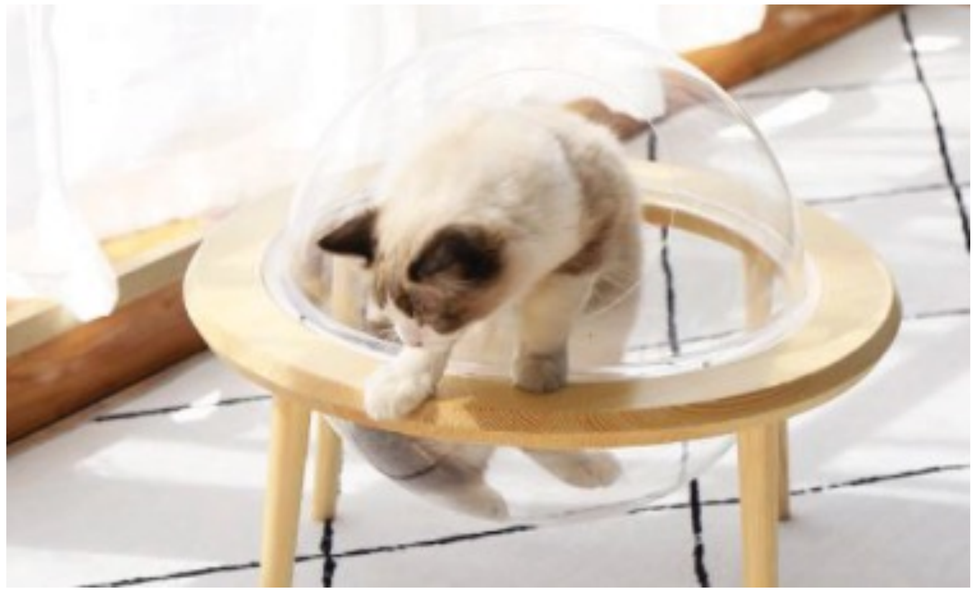

Nokori

NAKORI PET BED

Naptime has never been so anticipated! Compact, comfortable, and stylish, the INSTACHEW NAKORI Pet bed provides great sleep with a small-scale design

FEATURES

Small but Mighty

The INSTACHEW Loft Pet bed was created with a small living space in mind. This comfortable and stylish bed provides an excellent solution for those with a limited space or perfect for travel!

Easy to Clean:

The bed comes with removable covers for both the padding and pillow, for stress-free cleaning.

Elegant Design:

This bed provides a compact style with a beautiful bamboo wood exterior and comfortable interior.

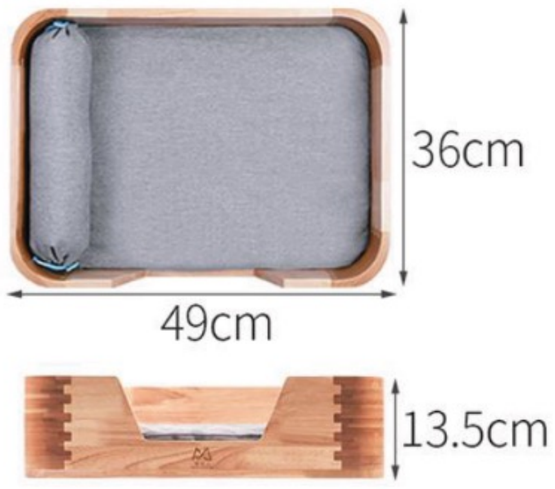

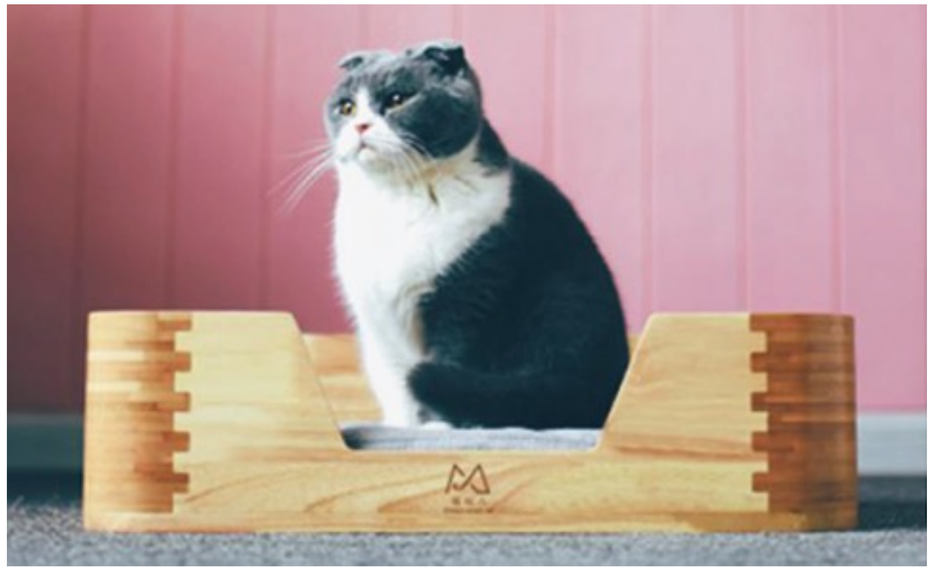

WEIGHT:
3.6 kg

PET TYPE:
SMALL TO MEDIUM CATS/DOGS

Materials:
Rubber wood, Bamboo wood

THE RAUNJI PET BED

The INSTACHEW Raunji Pet Bed is perfect for lounging. Our unique curved sheet design fits to your cat's body, providing a comfortable and ergonomic rest experience.

FEATURES

Ergonomic design

The INSTACHEW Hammock Pet Bed is created with a mouldable linen which fits the shape of your cat's body. This provides additional support during sleep.

Levels of comfort

The linen sheet comes with multiple layers including a breathable mesh mat and warm cotton, providing multiple degrees of comfort

Easy to Clean

To clean the bed, simply remove the outer linen and toss it in a washing machine!

WEIGHT:
2.45 Kg

PET TYPE:
SMALL TO MEDIUM CATS

Materials:
Linen, Bamboo, Wood.

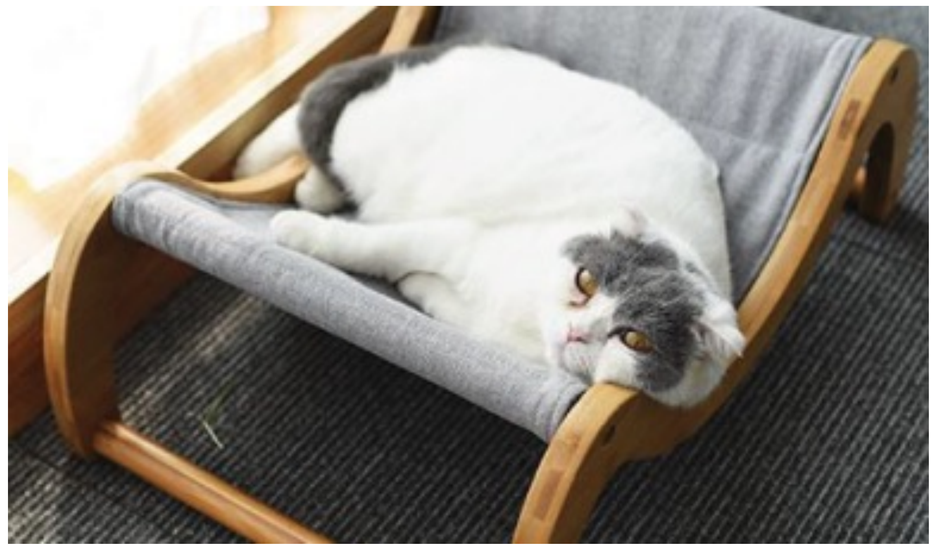

NESTUO CAT BED

The INSTACHEW Nestuo Cat Bed truly provides the comforts of home to your furry friend. Your cat can rest on the comfortable linen mat or play with the installed rattan ball toy. Rest and play! That's a Nest. One of INSTACHEW's Meow-sterpeices!

FEATURES

Rest and Play

You cat can enjoy the best of both worlds. Rest on the soft fabric mat surrounded by temperature preserving rattan or play with the dangling rattan ball! Play or rest? Why choose!

Easy to Clean:

Simply remove the outer cover from the mat and wash.

Design:

Our unique and beautiful design is sure to catch the eye of your guests and pet alike!

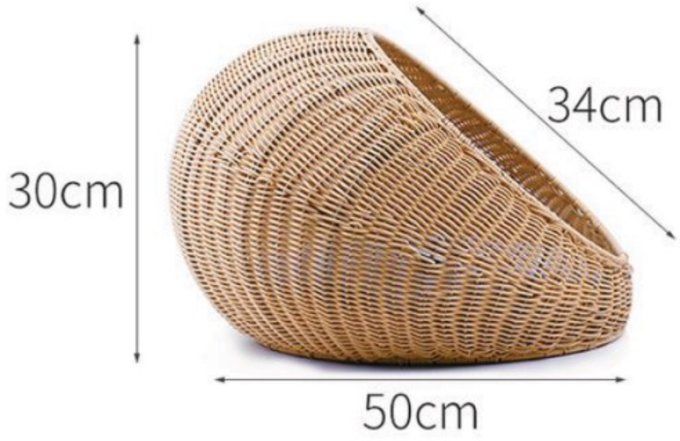

WEIGHT:
3.6 kg

PET TYPE:
SMALL TO MEDIUM CATS/DOGS

Materials:
Imitation Rattan, Linen, Fabric

THE DOME PET BED

Stylish, comfortable bed, and statement piece? The INSTACHEW Dome Pet Bed does it all! With its unique design, your cat can rest comfortably while being able to fully access the room.

FEATURES

Amazing Comfort

The soft nest pad adjusts to your pet's body shape and size. It provides optimal coziness for your pet allowing for a great night’s rest.

Easy to Clean:

The bottom pad is completely removable and washer friendly!

Design:

Our unique design combines style with comfort. The transparent dome allows pet parents to view their cat during naptimes and soak in “peak cute views.”

PET TYPE:
SMALL TO MEDIUM CATS

Materials:
Pine wood, Acrylic

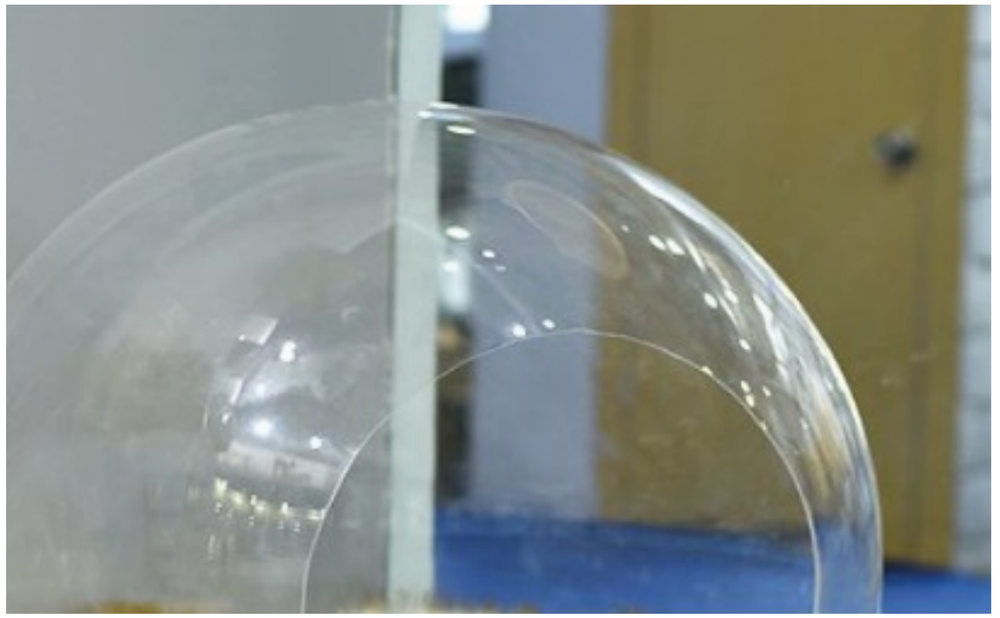

SATELLITE PET BED

INSTACHEW's Satellite Pet bed utilizes modern design principles to create the optimal sleep experience for cats. A spherical design with depth that is specifically created to fit a cat's frame. The open top and fiber lining creates a contrasting sleeping experience that is perfect for any cat!

FEATURES

Unique Design

The 360-degree rotation enabled open-topped bed provides a unique and stylish look for your home!

Ergonomically built

The dome design with high depths and lower bottoms is created to fit a small dog or cat's frame. The slightly enclosed top incentivises sleep and rest.

ECO friendly and innovative fiber

A unique fiber lining is breathable, comfortable, and easy to remove and change! In combination with its ecofriendly nature, the padding is a friend to your pet and the environment.

WEIGHT:
1.8 Kg

CAPACITY:
1.88 L

PET TYPE:
SMALL TO Medium

Sizing: CM

L 42 x W 42 x H 22.5

Add Ons

Replacement Felt Lining

Replacement Cushion

PURECOMFORT PET BED

The Purecomfort cat bed is cute, soft, and eye catching! Your pet will delight in its plush interior and comfortable exposed top. Soak in the sun and stay comfy! What's cuter than a circular shaped bed for your furry friend to curl up in?

FEATURES

Plush and Comfortable

A plush sponge pillow provides maximum comfort to your pet.

Open Top

A warm bottom and open top allows pets to soak in the sun while staying cozy and warm.

Non-Slip and Hassle Free

A nonslip design and bottom pad prevents slippage and unnecessary accidents.

SIZE CHART

Model	Size
M	39*43*15.5cm
L	50*56*18cm

PET TYPE:
SMALL TO MEDIUM CATS/DOGS

Materials:
Linen, Plush, Sponge

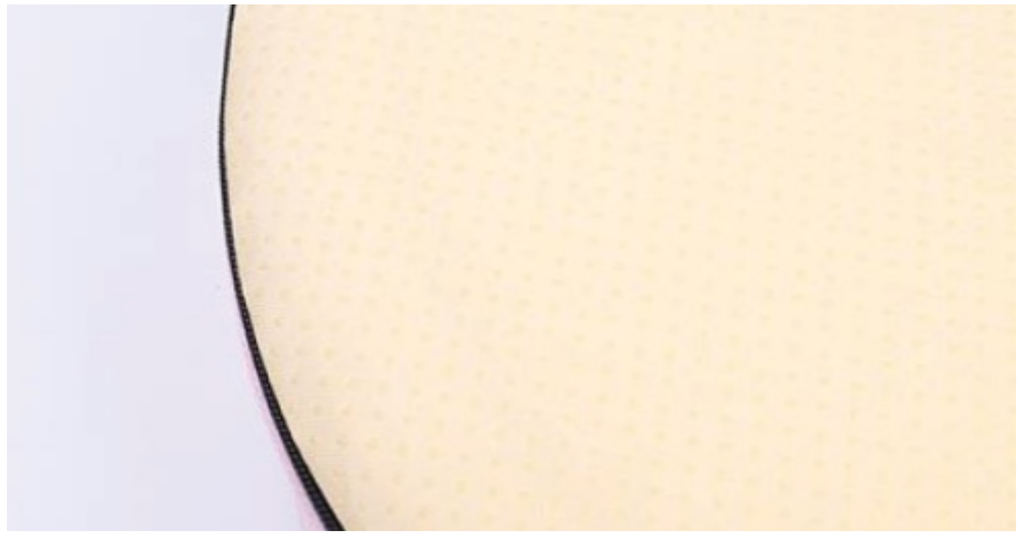

RAIN DROP PET BED

Get that “it’s raining outside on a Sunday” sleep quality with our INSTACHEW Rain Drop Pet Bed. Designed with a cooling rattan exterior and warm nest pad, your pet can lounge in comfort no matter the season!

FEATURES

Cooling Exterior

Made with Eco-friendly rattan, the tested exterior creates a breathable airy atmosphere for cats to rest in.

Comfortable pad

The comfortable interior pad is soft and warm, providing a lovely contrast to pets.

Design:

This unique design is eye catching and provides the option to suspend it in the air!

PET TYPE:
SMALL TO MEDIUM CATS

Materials:
Imitation Rattan

COOLING PET BED

The PETKIT Cooling Bed is the perfect bed for your furry friend. Its orthopedic memory foam provides great support for your pet's joints and pressure points. The cooling pad contains water-based gel which allows for a cool environment while your pet sleeps. This is the perfect product for your furry friends especially with summer temperatures on their way!

FEATURES

Memory Foam:
The memory foam allows for the bed to perfectly adjust and take the shape of your pet. It allows for your pet to rest comfortably while providing great support for their pressure points.

Easy to Clean:
Interior and exterior pad covers can be removed easily for cleaning.

Design:
The bed has been designed for optimal comfort for your pets using a beautiful linen fabric that is durable, soft and breathable. The exterior pad is made of soft velvet.

PET TYPE:
SMALL TO LARGE CATS/DOGS

SMALL:

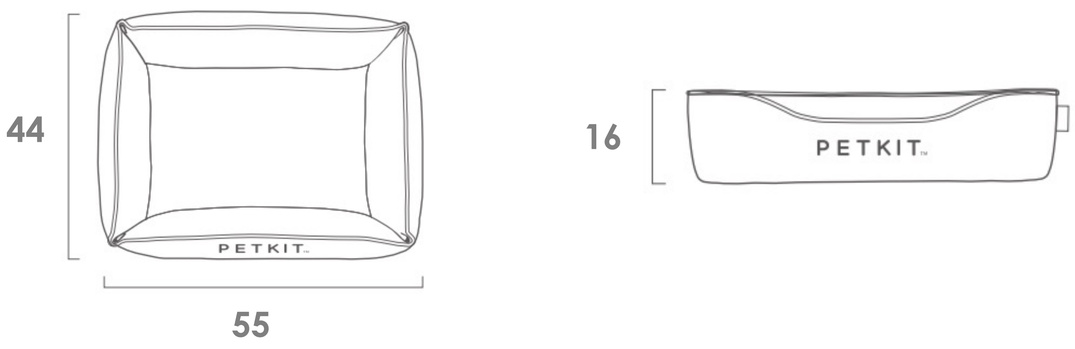

WEIGHT:
1 kg

MEDIUM:

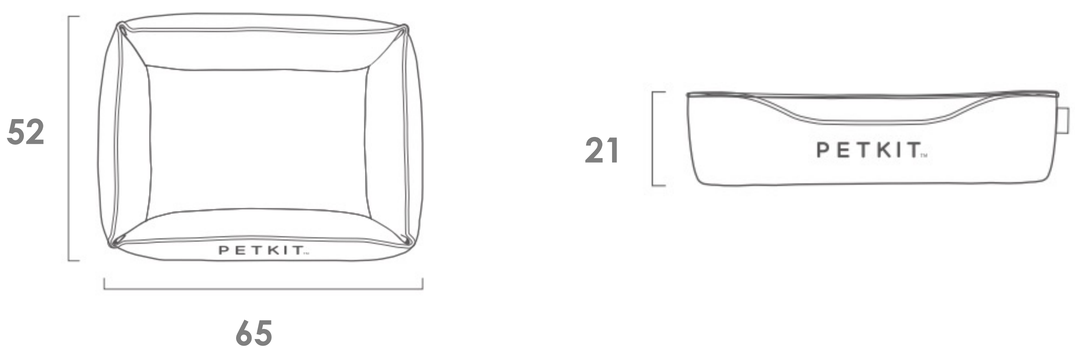

WEIGHT:
1.35 kg

LARGE:

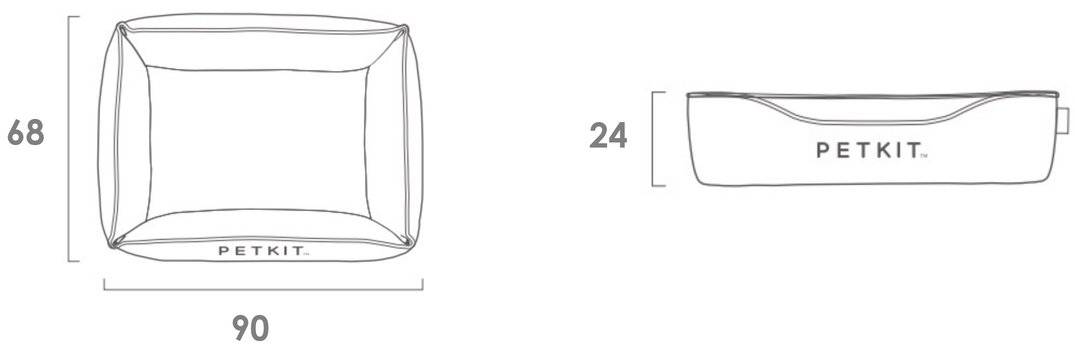

WEIGHT:
2.6 kg

DEEP SLEEP MATTRESS

The PETKIT Deep Sleep Mattress is the perfect bed for your furry friend to rest well. Its orthopedic memory foam provides great support for your pet's joints and pressure points. The unique modular design has a tighter and firmer construction, ensuring the bed keeps its shape and lasts longer. The jacket is made of high-quality fabric, which gives a loving pet a comfortable touch. The handle can be hung and lifted, for an easy-dry cleaning process!

FEATURES

Memory Foam:
The memory foam allows for the bed to perfectly adjust and take the shape of your pet. It allows for your pet to rest comfortably while providing great support for their pressure points.

Easy to Clean:
Interior and exterior pad covers can be removed easily for cleaning.

Design:
The bed has been designed for optimal comfort for your pets using a beautiful linen fabric that is durable, soft and breathable.

MEDIUM:

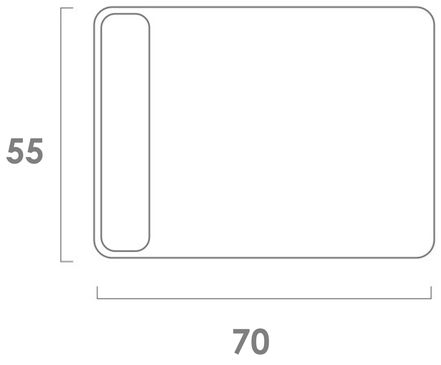

WEIGHT:
1.54 kg

LARGE:

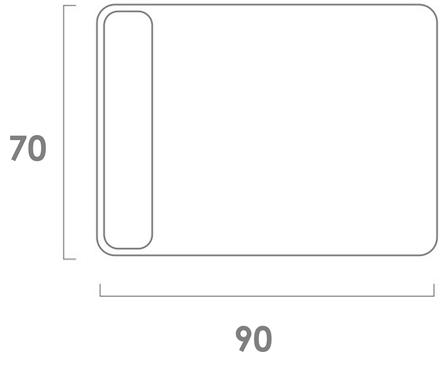

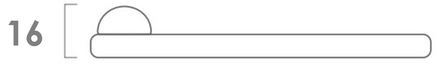

WEIGHT:
2.42 kg

PET TYPE:
SMALL TO LARGE CATS/DOGS

ALL SEASON BED

As an excellent pet bed, it can meet the needs of pets all year round! Give a loving pet a comfortable and quiet deep sleep experience.

FEATURES

Memory Foam

Double-sided Double Comfort mattress - High-Density Memory Foam with Heat Release and 3D Wave Shaped Orthopedic support.

Easy to Wash

Removable and Machine-Washable bedding cover. The handle can be hung and lifted, easy to dry.

Built to Last

The unique modular design has a tighter and firmer construction, ensuring that the bed keeps its shape and lasts longer! Bamboo charcoal memory sponge, always returns to its natural curvature. A non-slip bottom surface, 3D plastic dripping, and breathable design guarantees lasting comfort.

PRODUCT SIZE:

Medium: 67 x 51 x 12.5 cm
Large: 89 x67 x 14.5 cm

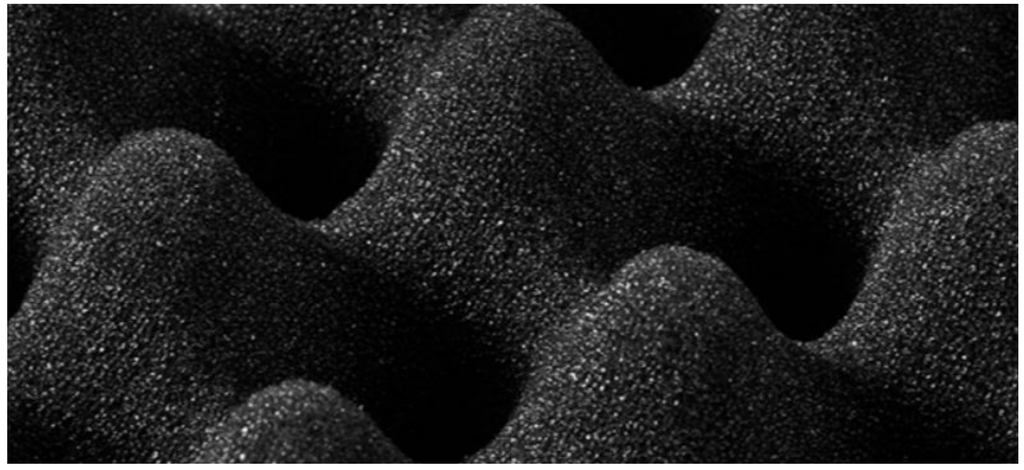

OVOO
PET BED

The OVOO Pet Bed is beautifully designed to adapt to any of your pets sleeping habits! Whether they lay on their back or belly, whether they are stretchers or curlers when they sleep, the OVOO Pet Bed will never restrict their sleeping positions! Not only does the OVOO Pet Bed bring comfort, but it also comes in style!

FEATURES

Modern Design:

The design is mid-century inspired which compliments all home interior designs.

Easy Setup:

Setting up the bed can be done within a few minutes.

INSTACHEW Ror Pet Bed

The INSTACHEW ROR Pet Bed is beautifully designed pet bed that fits well in a modern home. It is sturdy, durable, and soft.

FEATURES

Modern Design:

The design is mid-century inspired which compliments all home interior designs.

Easy Setup:

Setting up the bed can be done within a few minutes.

INSTACHEW Mane Pet Bed

The INSTACHEW MANE Pet Bed is beautifully designed pet bed that fits well in a modern home. It is sturdy, durable, and soft.

FEATURES

Modern Design:

The design is mid-century inspired which compliments all home interior designs.

Easy Setup:

Setting up the bed can be done within a few minutes.

DEEP SLEEP CAT BED

A cozy pet bed that is purr-fect for cats looking to have a nice nap. This bed is lined with a fuzzy interior and a stylish knitted exterior. This is the perfect addition to any house for kittens and cats to snuggle in.

FEATURES

Memory Foam:

Memory foam adjusts to your pet's body shape and size. It provides optimal coziness for your pet while also allowing them to get support for all their pressure points.

Easy to Clean:

To clean the Deep Sleep Cat Bed, remove the covers from the interior and exterior padding.

Design:

The bed's design provides your pet with absolute comfort with its fuzzy interior and stylish exterior. It is soft, breathable, and durable.

PRODUCT SIZE: L23.3cm x W42.2cm x H35

PINEAPPLE CAT BED

The perfect pineapple nest: interesting pineapple design, chenille fabric that is wear-resistant, inner pad available on both sides, anti-skid plastic bottom.

FEATURES

Comfort and Soft Enjoyment:

Cats are born to love the soft cushion and attractive materials. What is wrapped gently is a circle of thick flannel, which is soft and suitable. The side walls are shaped by stiff fabric, which is not easy to collapse and carefully guards the dream of cats.

Double-sided Insole:

For ease of use, the insole can be taken out separately, the intimate double design, delicate suede cotton, cotton, and linen texture, to meet more needs.

Plastic Stud Non-slip Bottom:

The bottom of the pineapple nest is made of non-slip particles, which are wear-resistant and durable, stable and not displaced.

PRODUCT SIZE: L 40cm x W 40cm x H 25cm

ENKEL
PET HOUSE

The Enkel Pet House is designed for cats and small dogs. The INSTACHEW Enkel Pet House has a stylish and functional design, which is sure to add to both your home décor and a cozy place for your pets to rest!

ENKEL PET HOUSE

FEATURES

Easy to Clean:

The bed comes with a washable cushion, for stress-free cleaning.

Pet House Design

Stylish and modern pet house design, making it easier to place anywhere in your home, which is sure to add to your home décor.

Convenient Size & Breathable

The widened area is designed to increase space for your pet to be able to move around inside, while still being a convenient size to place anywhere in your home.

Materials:
Linen, Plush, Sponge

WATERMELON RATTAN CAT BED

Cute and stylish with comfort for those perfect summers! Introducing INSTACHEW'S Watermelon Rattan Cat Bed!

FEATURES

Design:

Watermelon inspired design, perfect for cushioned comfort!

Easy to clean:

Simply remove the cushion to clean!

GROOMING

Lint Roller

Paw Cleaner & Massager

Paw Comb

2-in-1 Trimmer

LED Nail Clippers

LINT ROLLER

Remove pesky pet hair from any surface with a swipe of this lint roller!

FEATURES

Simple Design:

The handle is retractable and can be popped out easily.

Easy to Use:

A few swipes is all you need to get the job done.

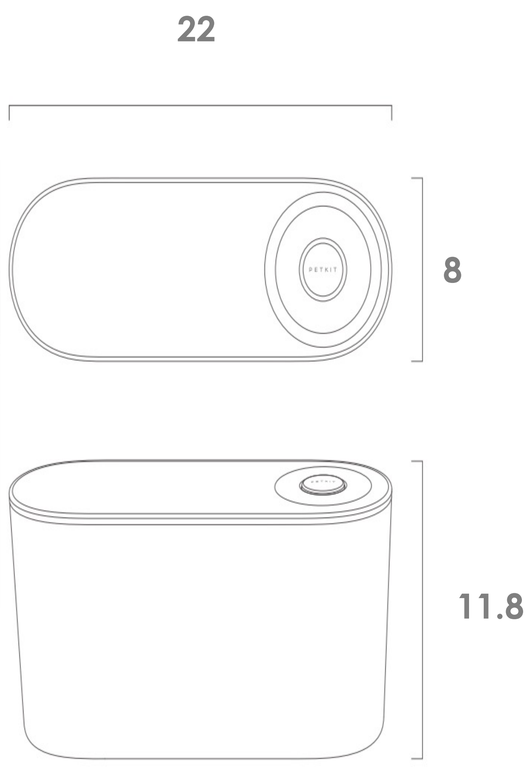

ADD-ONS:
Refill Rollers

PETKIT
REPLACEMENT LINT

Remove pesky pet hair from any surface

with a swipe of this lint roller!

FEATURES

Efficiency:

Quickly and Efficiently Pick Up A Lot Of Mess

Time saving:

Rip off the paper and then the hair will remove, save your time.

Multi Use:

Easy to remove pet fur, hair, or lint from your clothing, furniture, couch, carpeting, bedding, pants, or even your car interior.

Odor Eliminator:

The rope is elastic which reduces the impact of sudden movements for both pets and their owners.

Satisfied Clients:

Satisfied customer purchase experience -It's time to remove lint and pet hair with ease.

PAW CLEANER

The PETKIT Paw Cleaner is the quickest and easiest way to clean some furry muddy paws. Never worry about letting your dog run in the house with sticky, dirty paws with the handy Paw Cleaner. With two different sizes to choose from, clean big and small paws. Included is a massaging comb.

FEATURES

Safe and Comfortable:

The paw cleaner is safe to use as it has been designed to allow the pet parent to easily operate and prevent a wet mess; It is made with silicone based bristles that allow for enjoyable and comfortable cleaning experience

Portable and Deep Cleaning Paws :

It can be used at home or when you take hiking and camping; A gentle and effective paw washing cup is able to clean the dirt in the claw deeply when your dog plays outside and returns home, the cleaner cup can remove dirt from your paws before touching the furniture.

Easy to Use and Clean:

The massager can be taken out to be used as a brush and comb; The paw cleaner components are easily detachable; Just simply soak it in water with some detergent then let it dry and put it back together for the next use.

SMALL:

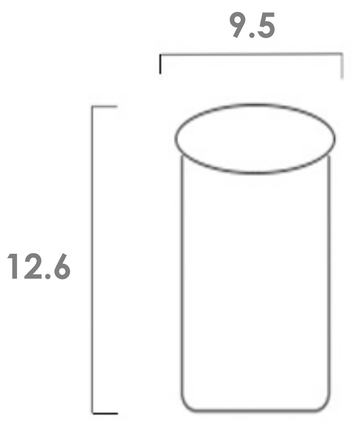

WEIGHT:
0.36 kg

MEDIUM:

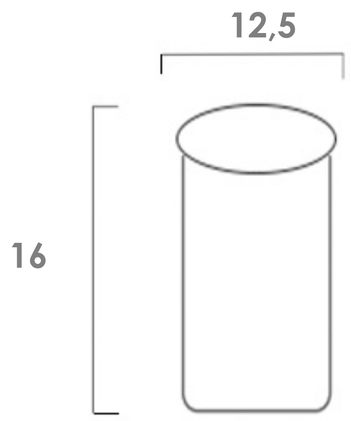

WEIGHT:
0.47 kg

PET TYPE:
SMALL TO MEDIUM CATS/DOGS

COMB & MASSAGER

The PETKIT Comb & Massager is the grooming accessory all pet owners need! This pet brush is made with high-quality, skin-friendly silicone and 3D curved bristles to glide through your pet's hair and remove tangles. The shape of this dog comb promotes blood and lymphatic circulation by gently massaging the skin, allowing it to also be used as a bath brush.

FEATURES

Efficient Dog & Cat Shedding Brush:

This grooming brush is made with soft silicone bristles which instantly attract loose & shed fur from your pet while it is being bathed; Remove up to 90% of shedding hair from your cat comb within minutes; Available in 2 colors: White and Pink

No Scratching and Enjoyable:

With premium silicone material, the Petkit cat grooming brush is ultra soft, safe, comfortable and durable; It will never scratch your pet's skin and they will love how it feels and enjoy grooming.

Gentle Pet Massager:

Pet brush massage for your pet is good for massaging particles won't scratch your pet and increasing blood circulation; Pets will start to relax under the slicker brush's motion.

WEIGHT:
0.36 kg

PET TYPE:
SMALL TO LARGE CATS/DOGS

COLOURS:

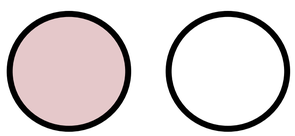

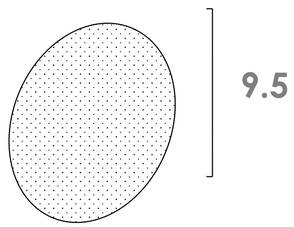

2-IN-1 Trimmer

Provides a calming experience for your pet when grooming them. This low vibration and quiet grooming set will get the job done and give your pet one stylish haircut.

FEATURES

Safe Sharp Blade

This trimmer offers an excellent trimming experience with its stainless steel blade and soft ceramic safety guard. The steel blade is durable and can last a long time. You can also detach it for cleaning or swapping with other head attachments.

Gentle Grooming Experience

Low Vibrations and ultra-quiet design help ease a pet's nervousness when grooming with the trimmer.

Multi-Use Detachable Heads

This trimmer comes with multiple heads, some even for those hard-to-reach areas - even between the paw pads!

Rechargeable Battery

The trimmer uses a rechargeable battery. Plug into the power source by using the USB port located on the trimmer's bottom.

IMPORTANT: If your pet has very long fur, please trim with scissors before using a trimmer to ensure it does not jam up.

PURECLIP LED NAIL CLIPPER

Get right to the bud of the nail with these ergonomically designed LED nail clippers. The light allows owners to quickly identify the nail bud and clip the excess part of their pet's nails.

PURECLIP LED PET NAIL CLIPPERS

FEATURES

Cutting Nails with Ease:

The stainless steel clippers are shaped like a half-moon designed to quickly encircle around a pet's nail and sharp enough to give it a trim.

Ergonomic Grip:

The handle is ergonomically designed for comfort when clipping nails. It also feels secure in an owner's hands when also having to hold a pet in place. The handle is suitable for hands of different sizes and grips.

LED Illumination:

The built-in LED light helps owners identify their pet's nail buds to help trim their nails safely. This innovative design allows owners to reduce the risk of accidentally clipping the bud and causing bleeding or injury to their pet.

DIMENSIONS:
2 x 1 x 6 (INCHES)

WEIGHT:
0.17 (LBS)

CLEANING

Air Magicube
Smart odor Eliminator

Pura Villa
Litter Box

Pura
Litter Box

Pura Dog
Pee Pad Tray

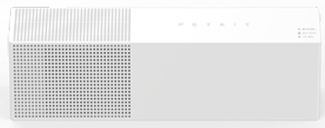

Pura Air Odor
Eliminator

5 in 1 Tofu Litter

AND MORE.....

5 in 1 TOFU LITTER

A new and innovative litter like you've never seen before! With a 55-degree hardness level, and built-in activated Carbon compounds, this flushable litter is dust, bacteria, and odor free!

FEATURES

Innovative:
The Tofu Cat Litter is an all-natural plant-based clumping cat litter made of food-grade soy pulp, making it safe for your cat and environmentally friendly. The litter is completely flushable due to its high solubility, also making it ultra-absorbent and fast drying! This litter is designed to be dust free, protecting both you and your cat's respiratory health.

Easy to Use:
The litter It is much easier to clump and clean; With 2x more absorbent than regular cat litter, the Tofu Cat Litter doesn't need to be changed as often as regular litter.

Absorption:
The Soy Pulp substance has the ability to complete instant adsorption and agglomeration in 1.5 seconds.

Deodorizing:
It provides constant deodorizing and freshness, through non-toxic fragrance allowing you and your cat to breathe comfortably because The Soy Pulp substance contains activated Carbon molecules/

WEIGHT:
2.7 kg

OPTIONS: **4 pack** **1 pack**

ESTATE LITTER BOX

Bringing functionality and style to the litter box. The INSTACHEW Estate Litter box has a stylish and functional design which is sure to add to both your home décor and potty time. Our built-in grate and easy to remove litter tray makes cleaning up easy!

FEATURES

Design:

Perfect for your modern home. This litter box is designed to ensure it doesn't stand out in your home. It is shaped like a beautiful estate home.

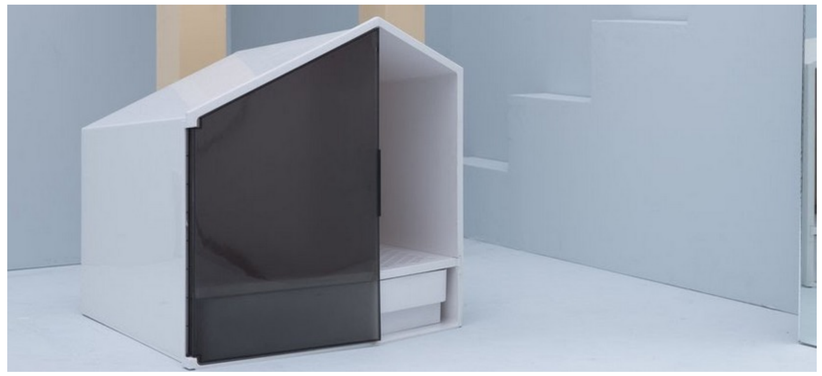

Removable litter drawer:

This feature allows for you to easily remove and discard waste.

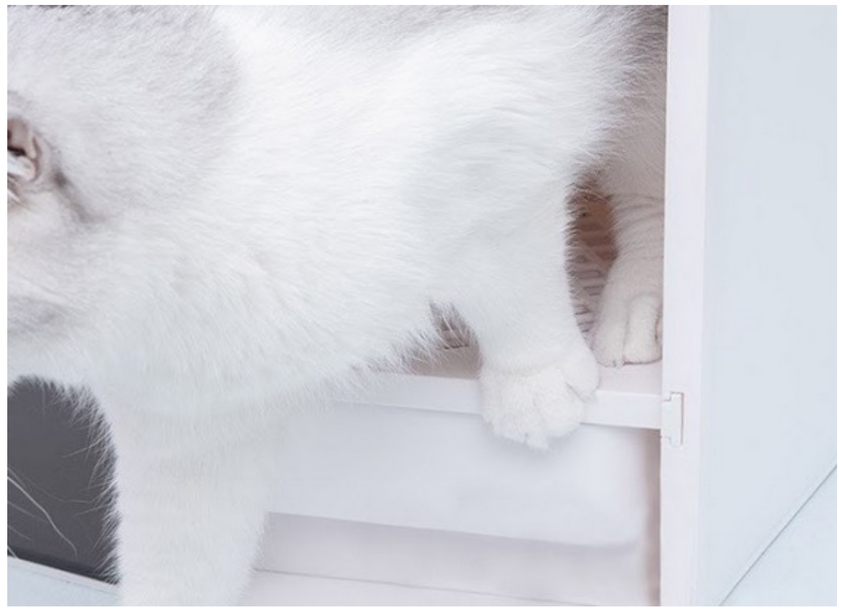

Durable et comfortable:

The Estate Litter Box is made of durable materials as well as designed to ensure maximal comfort for your cat.

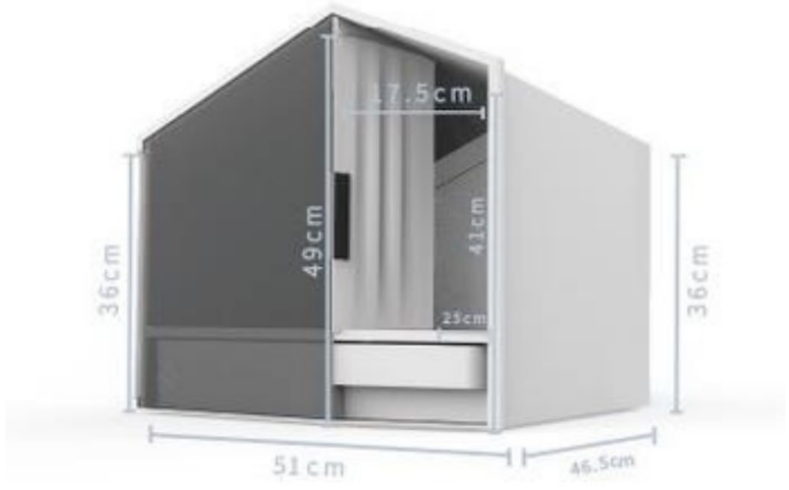

WEIGHT:
6 Kg

Dimensions:
53.5 x 53.5 x 54

PET TYPE:
SMALL TO MEDIUM CATS/DOGS

SILICONE MATS

The PETKIT Pet Placemats come in three fun colors and are made of a safe material; food-grade, premium silicone. These mats are the perfect size for all PETKIT products, including but not limited to; automated feeders, feeding bowls, fountains, and more!

FEATURES

Raised Edge:
With 0.2 cm raised edge the PETKIT dog water-proof mat protects your floors from water spills and messy wet food. Large enough to contain spills from both food and water bowls

Anti-Skid:
Eliminate spills with our skid proof pet mat

Easy to Clean:
Waterproof, durable Pet Feeding Mat, easy to clean and dries quickly. Dishwasher safe. Also, it is flexible, just roll it up to store or pack for travel.

Safe:
100% PREMIUM SILICONE MAT, FDA approved, non-toxic, hypoallergenic, BPA free. No open pores to harbor bacteria; odor and stain resistant

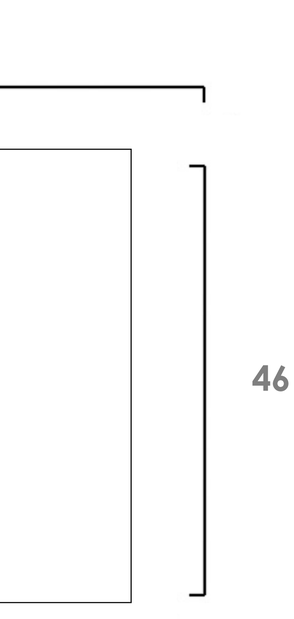

WEIGHT:
0.4 kg

PET TYPE:
SMALL TO LARGE CATS/DOGS

COLOURS:

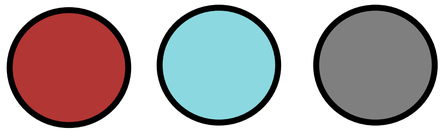

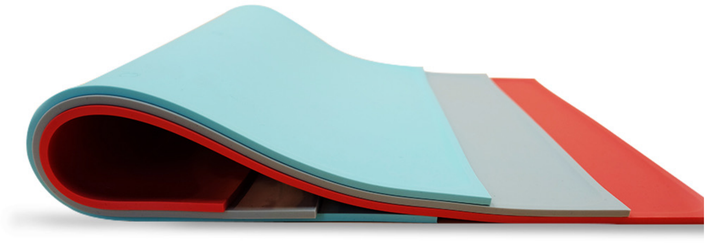

PURA CAT LITTERBOX

You know the litter trail that is left behind when your cat leaves their litter box? Well, the PURA Litter Box helps solve that problem. The plastic grid allows for the cat litter that sticks to paws to remain in the litter box as they are exiting. No mess, no stress!

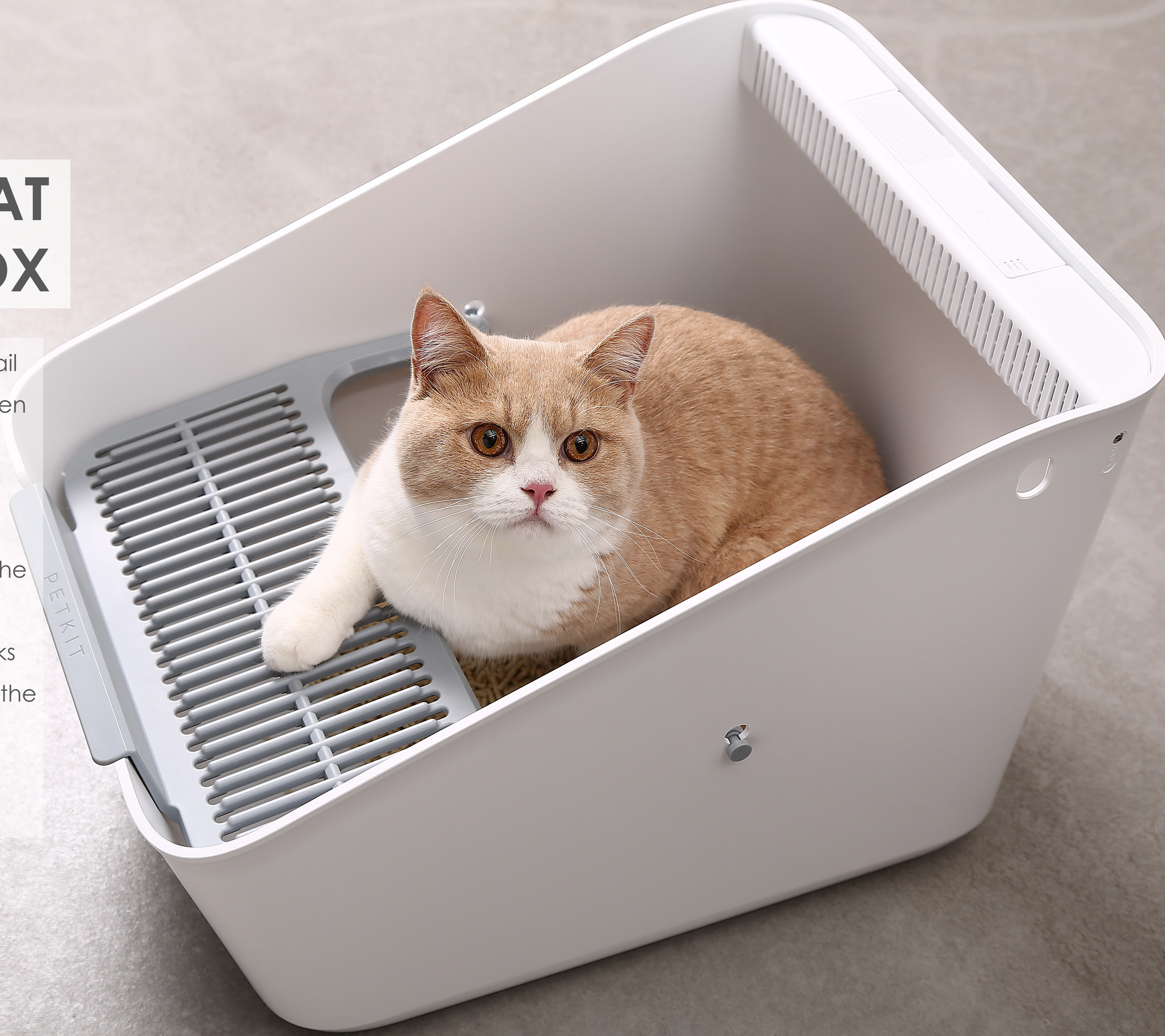

FEATURES

Litter Track Prevention:

The litter box holder has been designed with a platform that has 6.3 millimeters gaps to allow litter from the paws of your cat to fall back into the litter box; This keeps your floors clean and litter free.

Automatic Odor Eliminator:

The Pura Litter Box includes a complimentary Pura Air Odor Eliminator. A specific compartment has been made for the Odor Eliminator to detect when your cat leaves the litter box and release negative ions and air freshener to eliminator bacteria and odor.

Leak protection :

Disposable trays have plastic lining to help protect against leaking and keep your floors clean

Easy to Clean :

The pura litter box is easy to clean; The whole body can be taken apart and cleaned thoroughly; For litter scooping, simply raise the platform and scoop away

WEIGHT:
2.75 kg

PET TYPE:
SMALL TO LARGE CATS

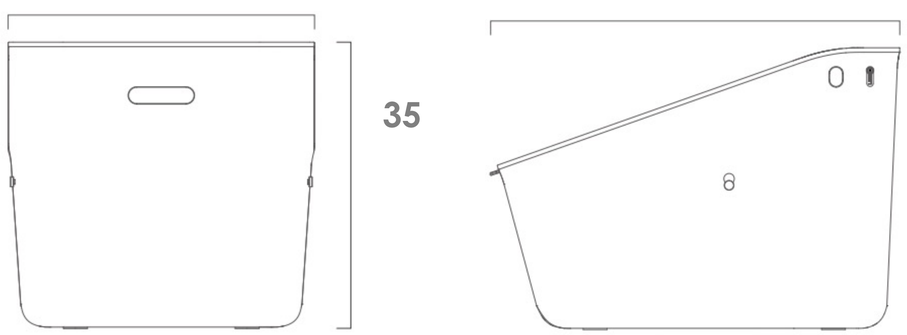

Watermelon Enclosed Litter Box

The Watermelon Litter Box is fun and effective litter box for your cat. It has a dome shape along with a door which allows for easy access and privacy. The litter step tray captures any litter that is caught in your cat's paws while exiting the inner tray. A scoop and container come with every Watermelon Litter Box.

FEATURES

Design :

Dome Shape and grapefruit color pallet inspired.

Automatic Odor Eliminator:

This feature allows for you to easily remove and discard waste.

Easy to Use :

Detachable flap entry and exit tray. Includes a scooper and its holder.

Great Capacity :

Suitable for cats up to 18 lbs.

PURA VILLA LITTERBOX

Gone are the days of litter tracking all over your house. We love our cats, but sometimes they leave a little mess behind. No need to stress any longer with the PETKIT Pura Villa Litter Box. .

FEATURES

Dimensions :
This pura villa litter box dimension is 518 x 523 x 539 millimeters; The actual toilet area accounts for about 65% of the total product; Fits all cats who are equal or smaller than 8 kilograms.

Litter Free Floor:
The semi-enclosed cat litter box doorway helps to remove litter particles from the cat's paws and makes it return to the large cat litter box.

Stylish Litter Box:
This covered cat litter box securely encloses cats for privacy and keeps litter hidden from sight; The semi enclosed design decreases the smell spread.

Internal Light:
It is automatically turn on and off light feature makes it easy to scoop litter at night or check the litter box situation.

Easy to Clean:
The villa white litter box is easy to clean; For litter scooping, simply raise the platform and scoop away; All parts can be disassembled, that is easy to wash and clean.

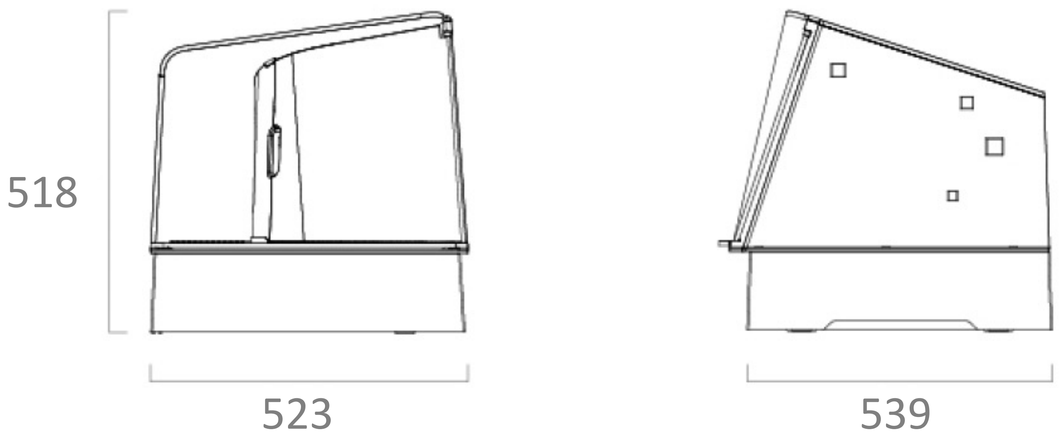

WEIGHT:
5.45 kg

PET TYPE:
SMALL TO LARGE CATS

OPTION:
ADD PURA AIR ODOR ELIMINATOR

GrapeFruit Enclosed Litter Box

The Grapefruit Litter Box is fun and effective litter box for your cat. It has a dome shape along with a door which allows for easy access and privacy. The litter step tray captures any litter that is caught in your cat's paws while exiting the inner tray. A scoop and container come with every Grapefruit Litter Box.

FEATURES

Design :

Dome Shape and grapefruit color pallet inspired.

Automatic Odor Eliminator:

This feature allows for you to easily remove and discard waste.

Easy to Use :

Detachable flap entry and exit tray. Includes a scooper and its holder.

Great Capacity :

Suitable for cats up to 18 lbs.

PURA DOG PEE PAD

The PETKIT Pura Dog Training Tray is the perfect training tray for your furry friends. This is an excellent way to have your pet’s potty trained for when you are not home. It is a double layered litter tray, specifically engineered to do indoor excretion training, made with premium composite resin, durable and corrosion resistant.

FEATURES

Easy to Clean:

The Innovative handle on the tray allows you to easily open and change the pad.

Detachable:

Simply lift the mesh with the handle and remove the pad. You can take the PURA DOG with you when you go on a trip for a convenient way to deal with your pet's waste.

Built in Sensors:

It has built in sensor which is placed inside the litter box to detect activities in the environment and take appropriate safety or functioning measures.

WEIGHT:
1.9 kg

PET TYPE:
SMALL TO LARGE DOGS

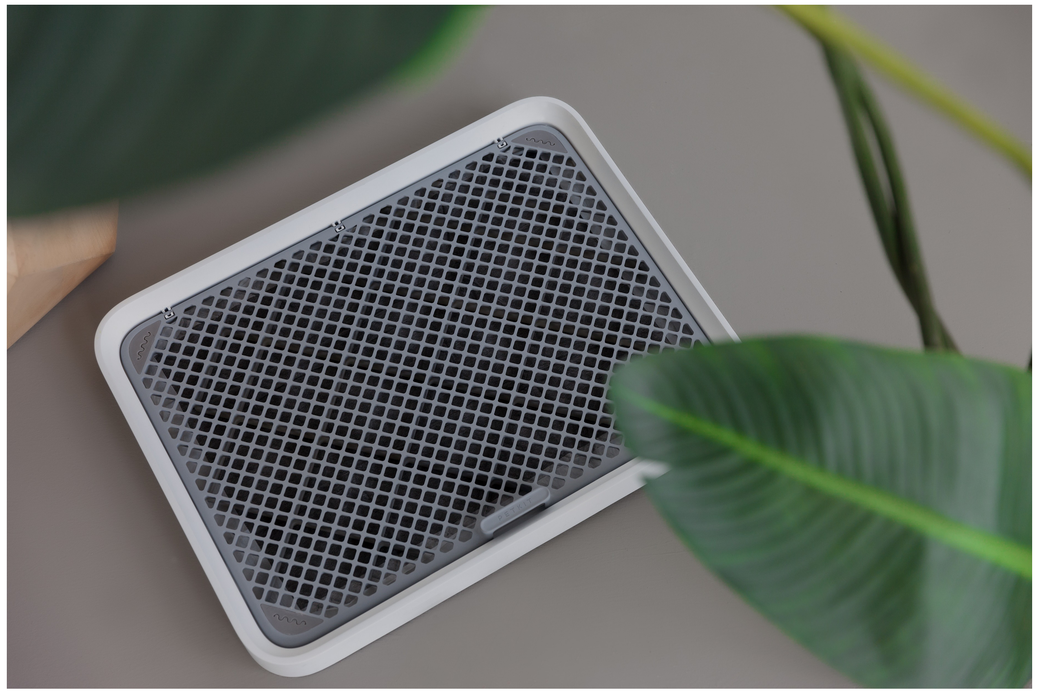

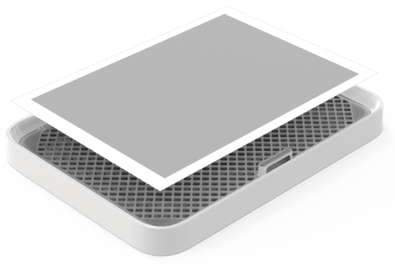

PURECLEAN SMART LITTER BOX

Tired of shovelling your cat's waste? Worry no more, with the Pureclean Smart Litter box you can automate the cleaning. The Pureclean is app controlled, allowing you to not only start cleaning cyles remotely but to also get status updates once it is completed.

PURECLEAN SMART LITTER BOX

FEATURES

App Controlled:

You can be in control of your electronics using your smartphone to turn it on/off, schedule cleanings, set timers. etc.

Easy to Clean:

All debris will be placed in a separate compartment for easy waste removal.

Health Monitoring:

Monitor your pet's weight and frequency of Litter Box use over time.

Safety Sensors:

Built in sensors to ensure that the device knows that your pet has safely left.

DIMENSIONS:
20 X 21 X 27 (INCHES)

WEIGHT:
32 (LBS)

MAGICUBE AIR PURIFIER

The PETKIT Air Magic Smart Odor Eliminator is a Mini Air Purifier to remove those stinky animal odors from your home. With a remote control app and anti-H1N1 virus function, this is the most considerate design of 2021!

FEATURES

Proactive Jetting Mode:

The Inductive mode removes odor automatically when your pet enters within its vicinity. The intermittent mode cycles every 6 hours automatically to keep the air in the room fresh. The jetting mode has three different speeds which can be controlled via the app.

App Enabled:

Use the app to control the jetting mode of the Magicube, with the choice of 3 different speeds. With 4 different working modes, the app will also alert you when the Magicube liquid is running low.

Easy to Use:

The Magicube is equipped with an LED display that contains the control panel and makes it easy to use.

- Environmentally friendly and durable.
- 3 different speed/ most effective area 30m2.
- Smart working mold and Sweat notifications.
- Turn on, turn off/ Switch modes/timing function/shortage alarm.

Ionic Air Purifier:

The Magicube is an ionizer that can remove airborne particles (ie. dust, viruses, etc) decreasing you and your pet's chances of catching some sort of viral bug! Quickly purify harmful particles, avoiding the spread of putrefaction and reproduction microorganisms

Get Rid of harmful Particles:

- Effectively captures hydrogen sulfide, carbon dioxide, ammonia gas. Bacteria/ putrefaction microorganisms/ ammonia hydrogen sulfide
- Indoor invisible formaldehyde can continue to evaporate for ten years. Eliminates formaldehyde, the invisible killer

WEIGHT:
1.5 kg

REFILLS:
MAGICUBE REFILL

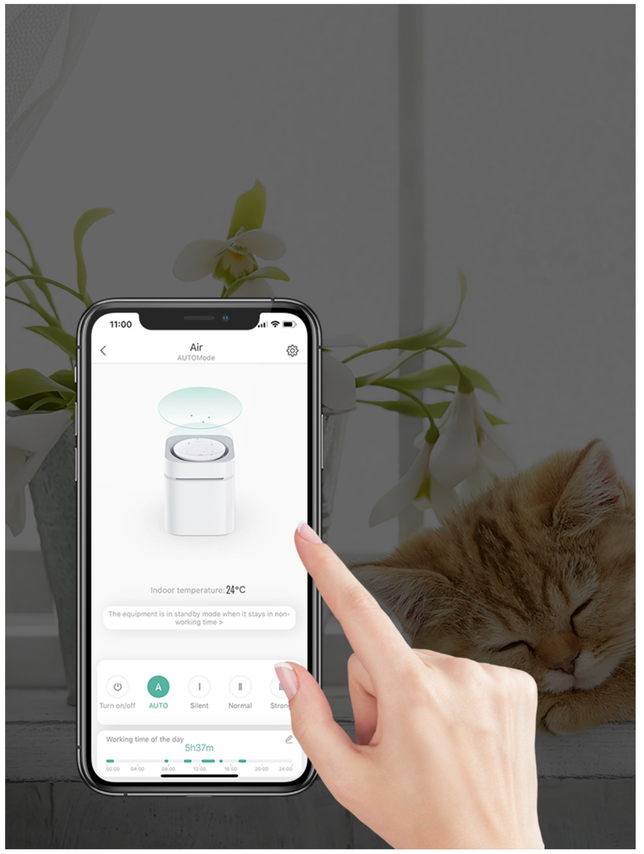

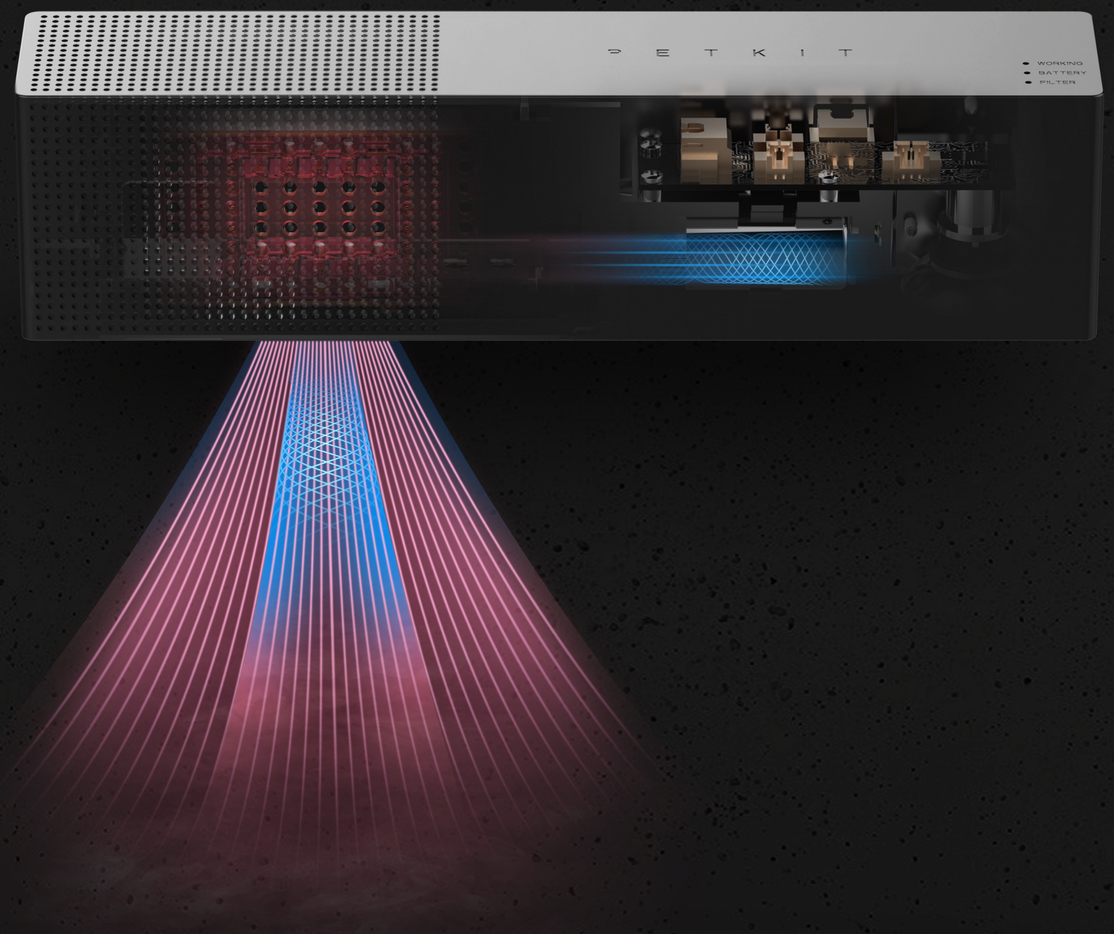

PURA AIR ODOR ELIMINATOR

Pura Air is a smart odor eliminator that makes living with a pet a little easier. Whether the odor is from your cat’s litter box or dog’s muddy paws, the Pura Air will capture and purify the odor-filled air and release it back alongside a fresh-smelling plant-based scent.

FEATURES

Proactive Jetting Mode:
The Inductive mode removes odor automatically when your pet enters within its vicinity. The intermittent mode cycles every 6 hours automatically to keep the air in the room fresh.

Modular Refresher:
A module within the Pura Air contains extracts from 20 different plants that are safe and non-toxic. These plant extracts can eliminate the odor by breaking down odor inducing compounds (i.e.. hydrogen sulfide) in the room and provides you with a room that is odorless and fresh.

Infrared Thermal:
The Pura Air is equipped with an infrared thermal sensor that can automatically identify objects (i.e.. pets) that enter its detection range, then release and the natural extracts to eliminate odor.

Ionic Air Purifier:
The Pura Air is an ionizer that can remove airborne particles (i.e.. dust, viruses, etc.) decreasing you and your pet's chances of catching some sort of viral bug!

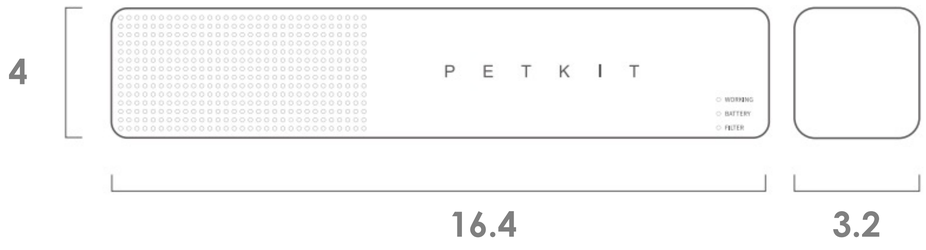

WEIGHT:
0.27 kg

ADD-ON:
Pura Replacement Filter Cartridge

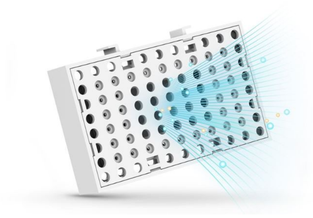

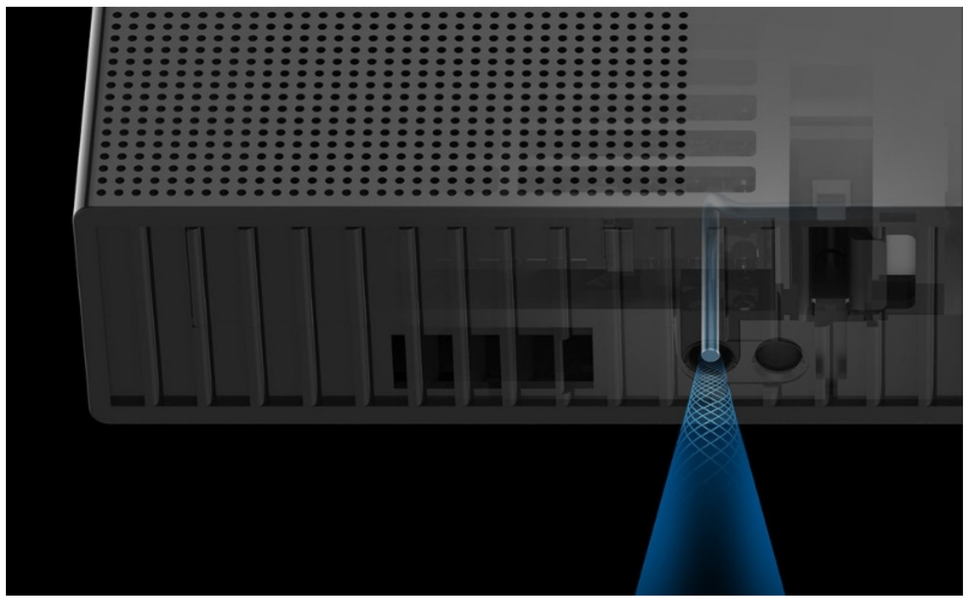

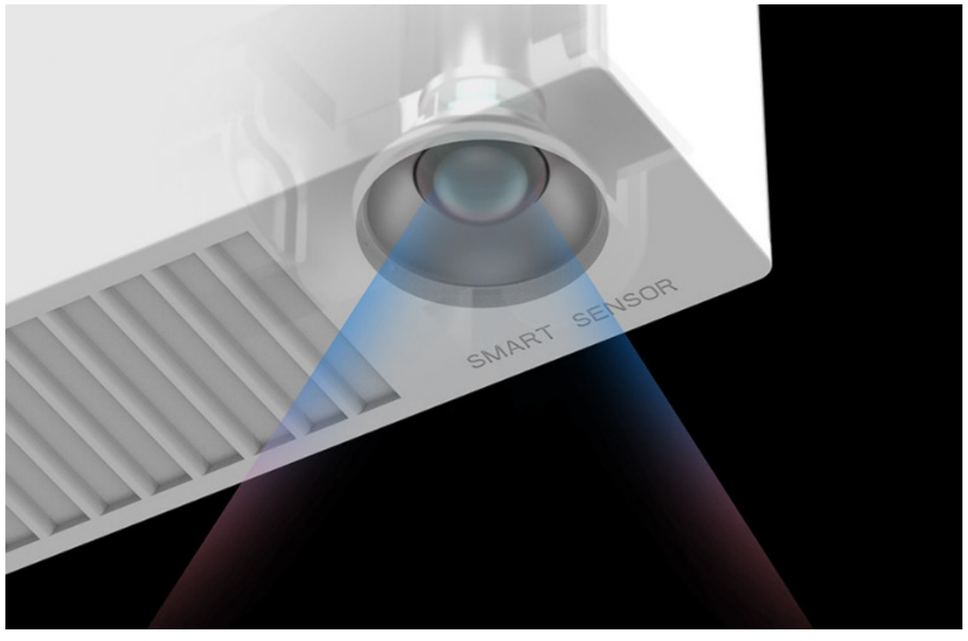

PUREMAX SMART PURIFIER

Breathe in and feel the Puremax difference! The wifi enabled Airmaster eliminates odors and freshens the room in the touch of a few buttons. No more wet dog or kitty litter smell in your home with this innovative new product. The shiny white box design won't take up a lot space in your home!

FEATURES

App Enabled
Control all the features on the INSTACHEW PureMax, using your Android or Apple device

Full Control
With built in intuitive jetting modes, control is in your hands. Set cycle timing, down periods, and monitor usage time on your phone!

Fresh Air Filter
The Airmaster utilizes an activated carbon filter and photocatalyst filter to purify and freshen your environment

Quiet Jetting
Built in quiet jetting modes provides 24-hour usage without excess sound pollution.

GET IT ON Google Play

Download on the App Store

HEPA Filter

Activated Carbon Filter

Negative ion

UVC Light

Photocatalyst Filter

Ozone

PURA X SMART LITTER BOX

In development for 5 years, the Pura X is a Wi-Fi enabled smart litter box that makes living with a cat that much more enjoyable and trouble-free. With the PETKIT app you have the ability to monitor your pet's weight and frequency of litter box use. Not only that, but the automatic instant cleaning feature makes taking care of your pet more sanitary and easier.

PETKIT PURA X Air Purifying Refill

The purifying refill solution is non-toxic and made from raw materials that are safe for use around pets. It also contains plant extracts that safely decomposes ammonia and hydrogen sulfides found in cat waste. The refill bottles are 55mls, which can last roughly around 30 days for a single cat household.

"

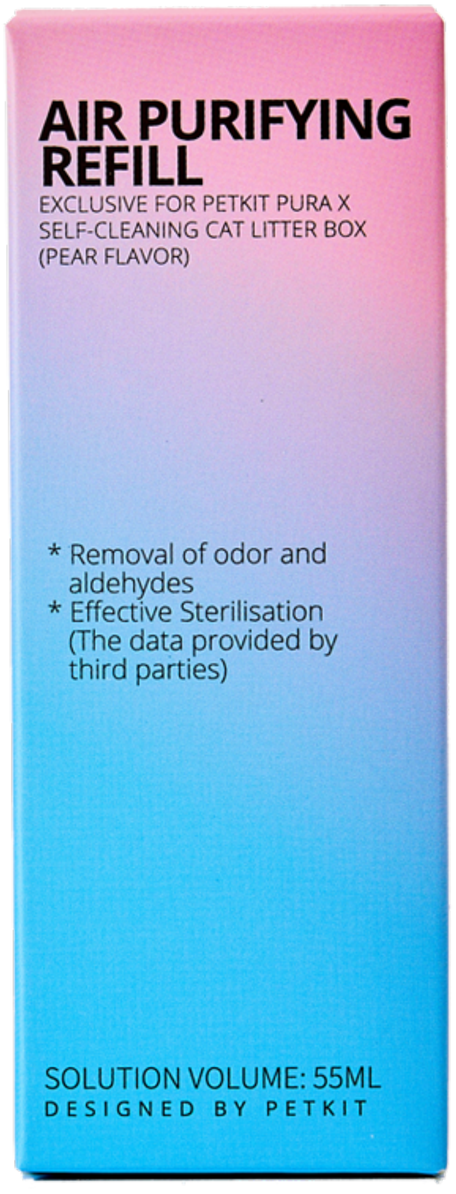

FEATURES

Automatic/Instant Cleaning:
The Pura X can initiate cleaning after ever use or initiate instantly via the PETKIT app.

Schedule:
If there's preference for the Pura X to initiate at a certain time in the day, this can be scheduled via the PETKIT app.

Health Monitoring:
Monitor your pet's weight and frequency of Litter Box use over time.

Odor Eliminator:
The rope is elastic which reduces the impact of sudden movements for both pets and their owners.

Safety Sensors:
Safety pyrolysis and weight sensors detect as your cat is approaching and turns the machine off during bathroom breaks. In combination with bottom infrared sensors, and abnormality alarms for strange occurrence, you can be sure of your pet's safety and comfort

Simple Upkeep
The inner cylinder and filter can be easily removed and washed independently. The bottom storage can be opened with a click and refillable bags simplifies cleanup!

GET IT ON Google Play

Download on the App Store

PURA ACCESSORIES

Pura X comes with all sorts of add-ons, from a litter mat to waste bin bags so your cat and live-in style and comfort.

FEATURES

Catches Stray Litter :

Litter caught in your cat's paws will fall onto the Pura X litter mat right away. It stored inside the mat so it can be emptied later at your convenience. The orange area in the image is considered the "safe zone," where litter is most likely to land.

Landing Pad:

Acts as a comfortable landing pad for your cat when they jump out of the Pura X.

Environmentally Friendly:

This mat is double layered and is made from environmentally friendly materials. .

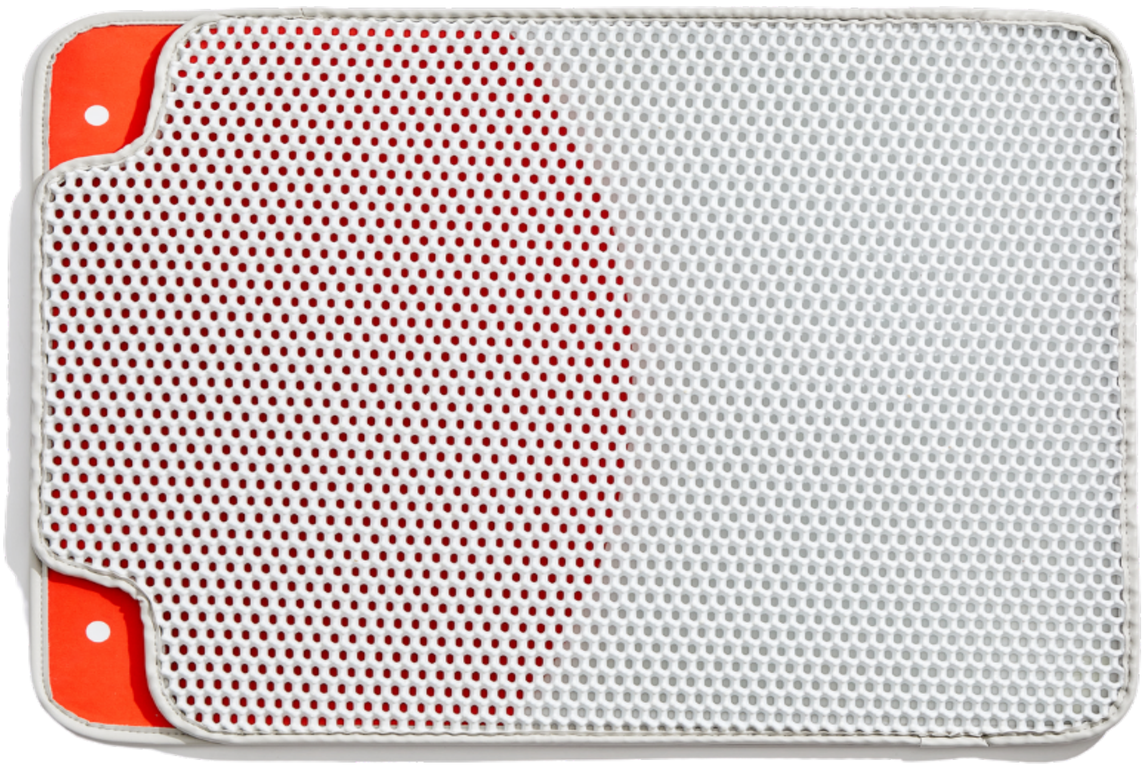

FEATURES

Colorful & Stylish:

Make your Pura X your own by adding a colored mat to the top of it to add to your aesthetic.

Comfortable for Kitty

A comfortable pad that your cat can sit on when they want to relax. Their litter box isn't just for Bathroom breaks anymore.

FEATURES

Waste and Clumps in one place

After the waste and clumps fall into the waste bin, they fall into the waste bin bag for convenient and easy clean up.

Secured and Easily Removeable

The waste bin is secured with a plastic ring that snaps into place onto the waste bin. When removing, detach the ring, and use the waste bags draw sting to tie it up and throw waste and clumps away.

TRAVELING

Air Pro Harness

Dog Waste
Bags Dispenser

Space Leash

Go Leash

Breezy Cat Carrier

Air Fly Harness

AND MORE.....

BREEZY CAT CARRIER

The PETKIT Breezy Cat Carrier is the traveling bag for the pet parent who treats their furry friend like their little sidekick. With two different colors to choose from, share every journey with your beloved furry friend and take them wherever you go safely, stylishly, and easily. With optimal ventilation and comfort, take your furry best friend everywhere while they enjoy the scenic world around them. This Cat Carrier is not only an amazing gift but can also work as a dog carrier!

FEATURES

Built-In Fan:
The quiet, built-in fan provides fresh airflow for your pets while inside the carrier. The air flow can be set to automatic or you can manually adjust it based on you or your pet's preference.

Built-In Lighting:
A simple double tap of the controls will gradually illuminate the interior so it doesn't startle your pet, This allows your pet to see their surroundings and for you to peek and check-in on your pet.

Tinted Window:
The tinted viewing panel allows your pet to enjoy the beautiful scenery while being protected and shaded from the harsh sun.

Shock Reduction System:
The smart shock absorption system is built into the back plate of the backpack and is designed to the force of your pet's weight on your body and minimize shock from moving around. Specially designed metal plated food pads prevent the bag from falling when placed on the floor.

Convenient Size and Breathable:
The widened bottom area is designed to increase surface area for your pet to move around inside, while still being a convenient size to wear and transport. The intelligent ventilation system allows for smart, automatic air control dependent on the internal temperature of the bag. This keeps the bag comfortable, breathable, and minimizes noise interference.

WEIGHT:
1.4 kg

DIMENSION (LWH IN CM):
32 x 27 x 44.5

COLOURS:

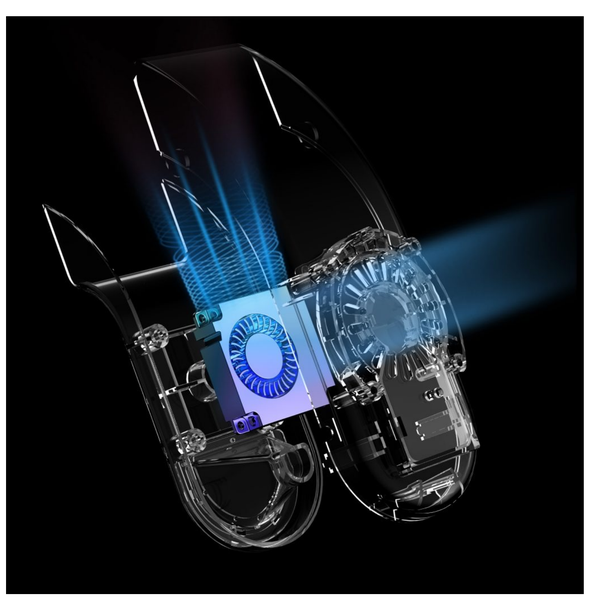

TREKPOD PET CARRIER

Travel in style with the INSTACHEW Trekpod Pet Carrier. Combining modern design with timeless comfort principles, your pets will be delighted to leave the house! The intelligent temperature control feature allows for walks with your pet in the warm weather and cold. The tinted window enables your pet to enjoy the scenery on trips and travels. The carrier's shock absorption system let's your pet enjoy travelling with minimum movement and force. Not only that but the Trekpod Carrier also has an intelligent ventilation system that allows your pet to breathe clean air with low noise interference.

FEATURES

Intelligent Temperature Control

The INSTACHEW Trekpod pet carrier utilizes modern technology to always ensure an optimal temperature. when the temperature reaches 25 degrees, one fan turns on automatically. When the temperature reaches 28 degrees, both fans are turned on. The temperature is reduced to 27 degrees. Fans will time out and adjust. This allows your pet to travel with you in hot weather and cold!

Multiple Modes

Take the control into your hands! Adjust modes on the play to suit your pet.

Robus Power Options

The Trekpod is powered by a 5V USB power bank which doubles as a portal charger if needed! Charge any device with the portable outlet.

Tinted Window:

The tinted viewing panel allows your pet to enjoy the beautiful scenery while being protected and shaded from the harsh sun.

Shock Reduction System:

The smart shock absorption system is built into the back plate of the backpack and is designed to the force of your pet's weight on your body and minimize shock from moving around. Specially designed metal plated food pads prevent the bag from falling when placed on the floor.

Convenient Size:

The widened bottom area is designed to increase surface area for your pet to move around inside, while still being a convenient size to wear and transport.

Breathable:

The intelligent ventilation system allows for smart, automatic air control dependent on the internal temperature of the bag. This keeps the bag comfortable, breathable, and minimizes noise interference.

WEIGHT:
1.5 k

DIMENSION (LWH IN CM):
32 x 22 x 43

Materials
Plastic + Woven

COLOURS:

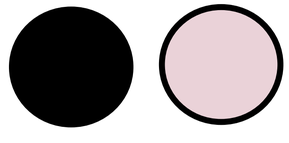

Additional smart features available for addon!

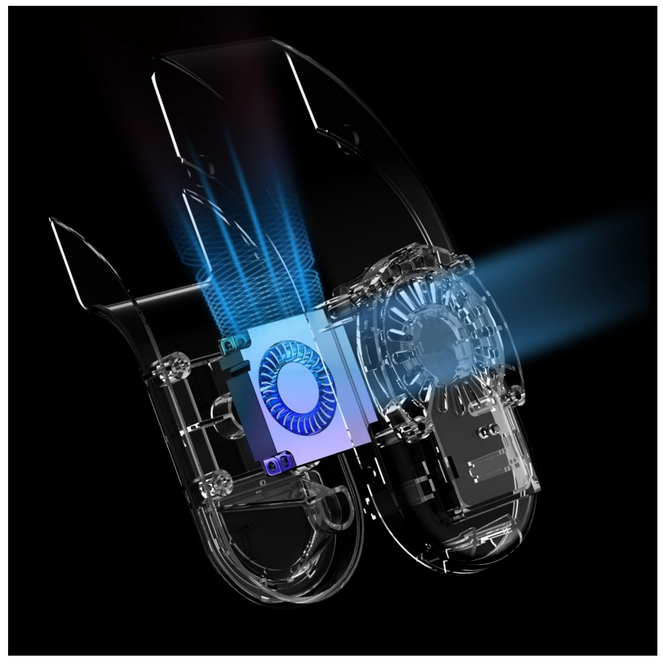

CAPSULE PET CARRIER

Travel in style with the INSTACHEW Capsule Pet Carrier. The spherical structure provides tons of light and room for your pet on the go. A specially designed pillow allows for comfort and stabilization. Coming in at a total of 1.6KG, this lightweight solution is comfortable and practical!

FEATURES

Lightweight Design

Coming in at a total of 1.6 Kg, the INSTACHEW Capsule Pet Carrier is a comfortable and practical travel solution for short or long distance trips!

360 Degrees Exposure

A transparent spherical design provides ample light and room on the go.

Comfort First

Our specially design pillow can be inputted to allow for additional comfort and stabilization. A raised carrying handle is perfect for car travel!

.

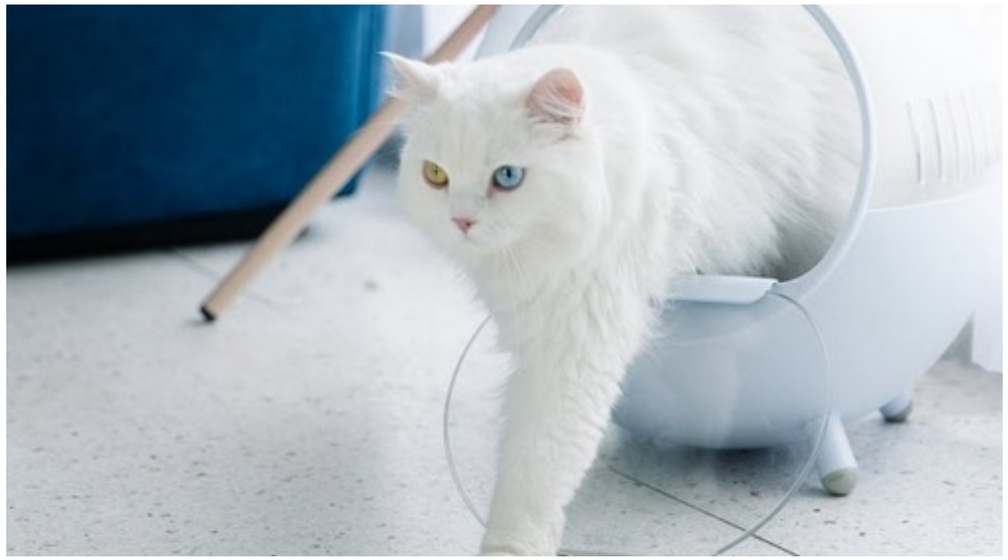

WASTE BAGS DISPENSER

PETKIT's dog waste bag dispenser has been designed to be as convenient as possible: its easy to attach to your dog's lead, harness or your bag, and each bag is large enough to place over your hand to pick up waste with ease. The top easily unscrews, and refill rolls can be placed inside with the first bag ready to go: no tugging or struggling to find the start of the roll.

FEATURES

Easy to Use:
Each bag is large enough to place over your hand to pick up waste with ease. The top easily unscrews, and refill rolls can be placed inside with the first bag ready to go: no tugging or struggling to find the start of the roll.

Attachable:
It's easy to attach to your dog's lead, harness or your bag.

Durable:
The thickened material we use is non-toxic, durable and leak-proof.

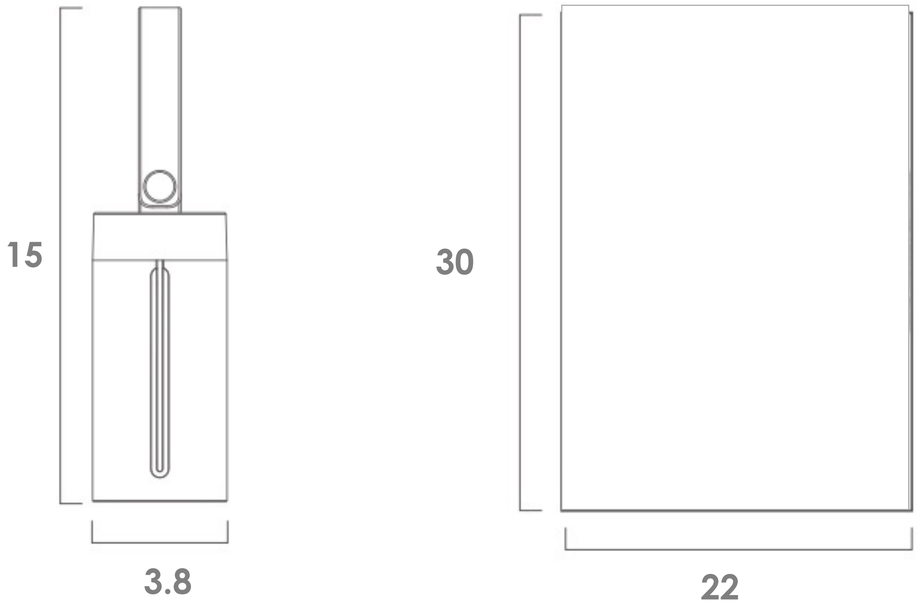

WEIGHT:
0.36 kg

ADD-ON:
Dog Waste Bags Refill

GO SHINE LEASH

The PETKIT Go Shine Leash is a trendy retractable dog leash that lights up with different customizable colors! Never worry about being unsafe during night walks with your dog (or cat even) as the built-in LED flashlight makes it easy to see ahead of you and makes it easy for drivers and other pedestrians to see you.

FEATURES

Double Streamer LED Rings:
Want to make your walk interesting in the dark, simply change the color of your leash to any color you like.

LED Flashlight:
Watch where you are walking at night using the flashlight that comes with the leash.

Smooth and Flexible:
The Go Shine has been designed to allow for the pet owner to have a strong grip while being able to control the features of the leash.

Patented Semi-Automatic Lock:
You will have full control of the length of the leash with patented the semi-automatic lock.

Inductive Touch:
A simple touch can turn on the light and allow for you to choose the color of your liking.

Magnetic Contact Charging:
The Go Shine is simply charged with a separate base.

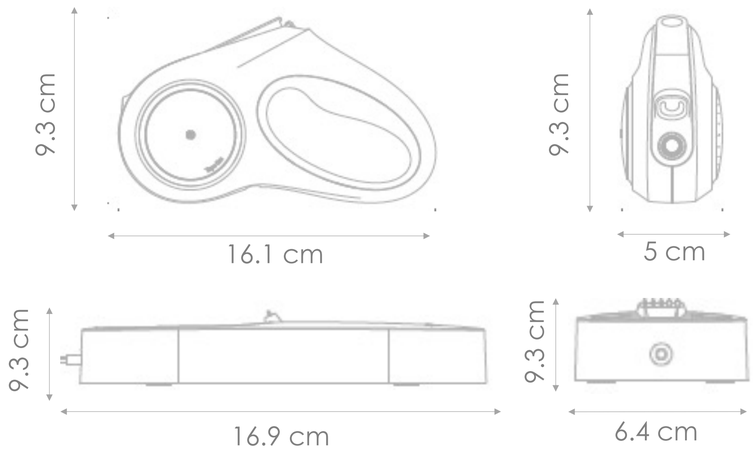

WEIGHT:
Body – 212 g
Base – 153 g

Material:
Shell + Base – ABS
Handle - BioCleanAct

Safety Belt

The PETKIT Pet Safety Belt is the essential accessory for the pet owner that likes to take their pet on car rides while staying safe. With its flexible material and durable body, this dog safety belt is essential in ensuring your pet’s safety.

FEATURES

Easy to Use:

DURABILITY: Made with durable polyester fiber and premium metal ensuring your pet's safety.

SIZE:

5 cm x 25.5 cm

SPACE LEASH

The Space Leash is a handsfree retractable leash that can be used during the day or night. The Space Leash comes in 3 models: Space Leash I, II, and III. The Space Leash III comes with an app-based tracker!

FEATURES

Hands Free Design:
Designed for allowing your hands to be free while walking your dog.

Lighting System
Watch where you are walking at night using the flashlight that comes with the leash. For safety reasons, an illuminating ring can be turned on as well.

Telescopic Technology:
The smooth retractability of the leash comes from the shaftless telescopic traction that allows for a 360-degree retraction.

Elastic Rope:
The rope is elastic which reduces the impact of sudden movements for both pets and their owners.

Smart:
Connect to an app to monitor activity with your dog and the route taken,

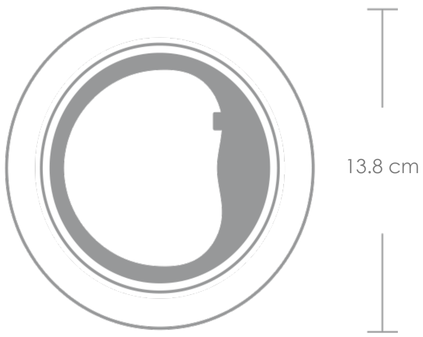

Additional Information:
Charging Method – microUSB
Voltage – DC 5V
Weight – 230 g
Battery Capacity – 200 mah
Rope Length – 2.6 m
Max Static Pull – 50 kg

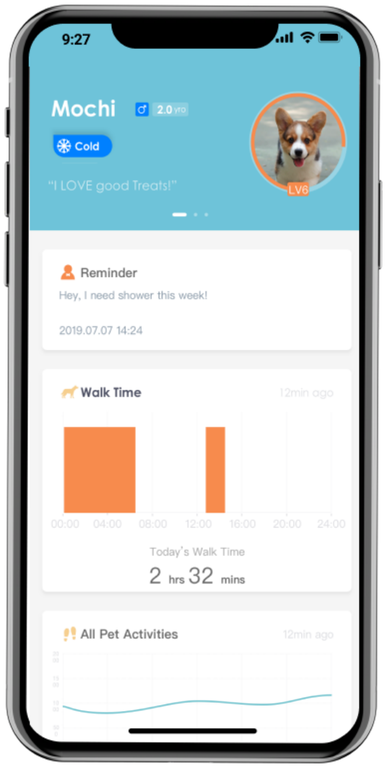

GET IT ON Google Play

Download on the App Store

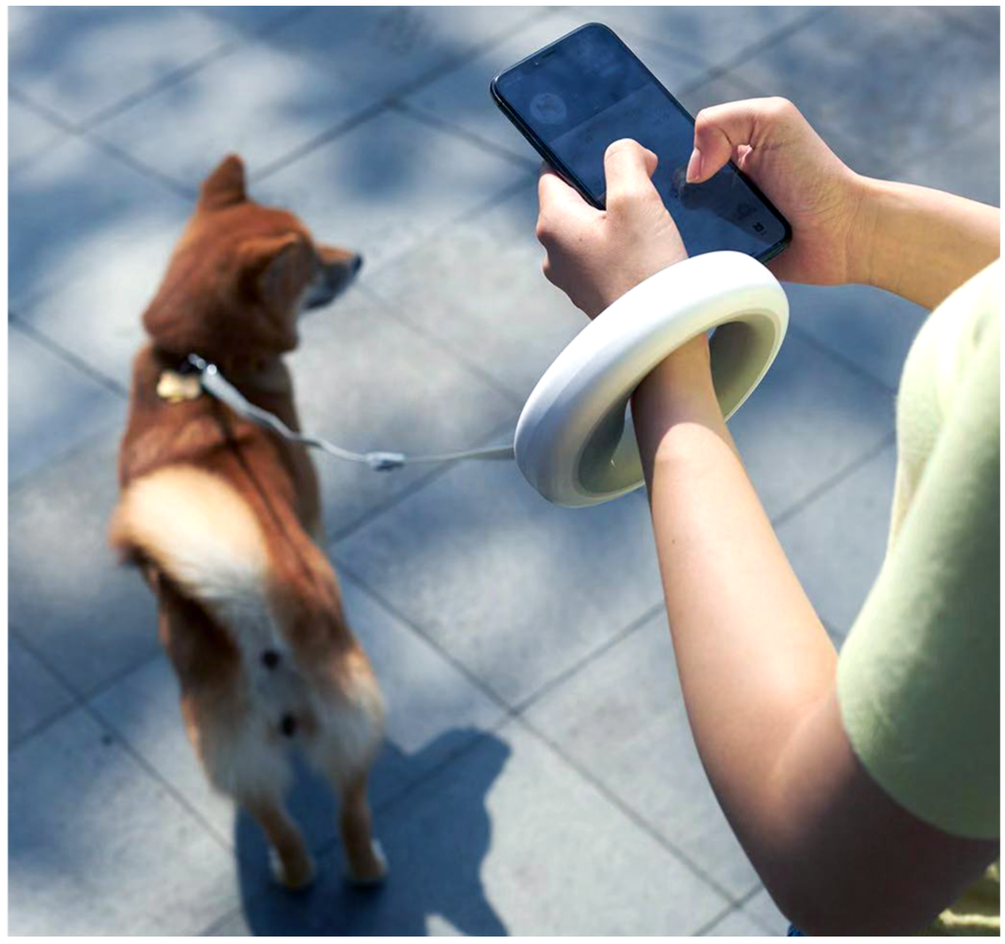

AIR PRO HARNESS

The PETKIT Air Pro Harness (available in three different sizes) combines comfort with style, making walks with your pet more enjoyable and relaxed. With its soft and breathable design, this harness for dogs provides protective cushioning while your pet barely notices they are wearing a harness.

FEATURES

Comfortable:
The harness is designed to reduce pressure and discomfort from your dog's thorax and abdomen.

Light:
The Air Pro Harness is made of 8 mm light foam making it elastic and shock absorbent.

Breathable:
Cationic dyeable polyester (CDP) exterior lining gives the Air Pro Harness the ability to quickly dry up and breathable. Perfect for your pet during the hot summer months.

X-SMALL:

35-40

40-45

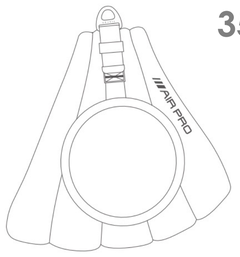

WEIGHT:
0.175 kg

SMALL:

40-47

45-52

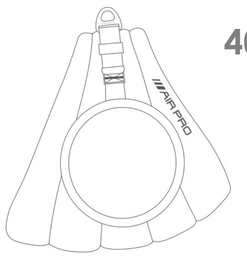

WEIGHT:
0.191 kg

MEDIUM:

46-52

52-58

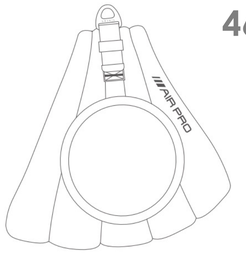

WEIGHT:
0.216 kg

PET TYPE:
SMALL TO MEDIUM DOGS

ADD-ON:
PETKIT seat belt

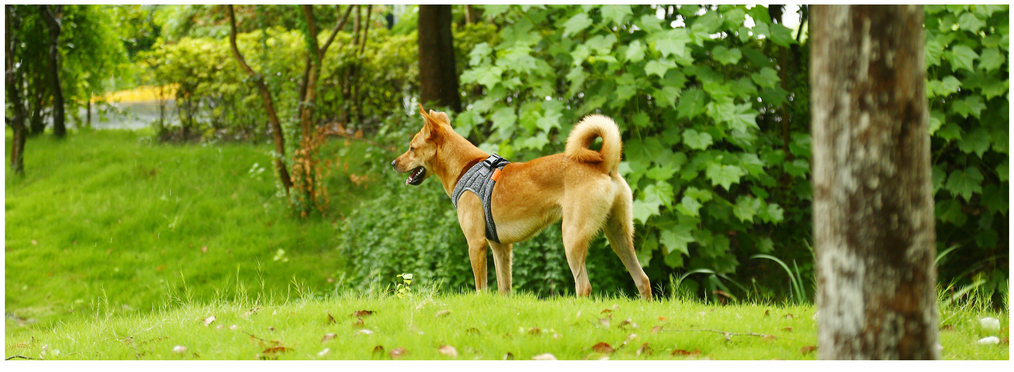

AIR FLY HARNESS

The PETKIT Air Fly Harness is a fashionable pet harness that combines comfort with style. This new generation dog harness uses 3D integrated weaving technology, and the fabric is blended with elastic yarn. The Air Fly Harness gives you and your dog a comfortable and relaxed walking experience. With four different size options, this dog harness can be worn by small to large dogs and cats.

FEATURES

Elastic Yarn Interweaving:
The Air Fly harness is made with an elastic yarn that is blended with rubber filaments to enhance elasticity and fitting.

3D Integrated Weaving:
The Air Fly Harness is made to be light, breathable, wear resistant, and comfortable.

Chest Cushion:
A cushion made of soft sponge is added to the chest area to reduce impact during the pulling process.

Easy to use:
The Air Fly Harness is designed to be easily worn and washed. It is machine washable.

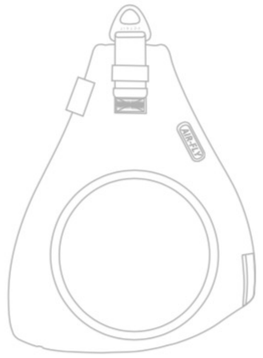

Materials	80%Polyester, 18%Nylon, 2%Spandex
Size	XS / S / M / L

SIZE	XS	S	M	L
Chest Girth (cm)	40-45	45-52	52-58	58-66
Neck Girth (cm)	35-40	40-46	46-52	52-58

PET TYPE:
SMALL TO LARGE DOGS

ADD-ON:
DEWORMING CAPSULE –
Effective for 1 week

ELASTIC YARN INTERWAEVING

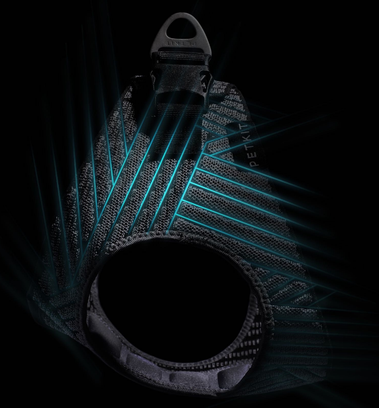

3D INTEGRATED WEAVING

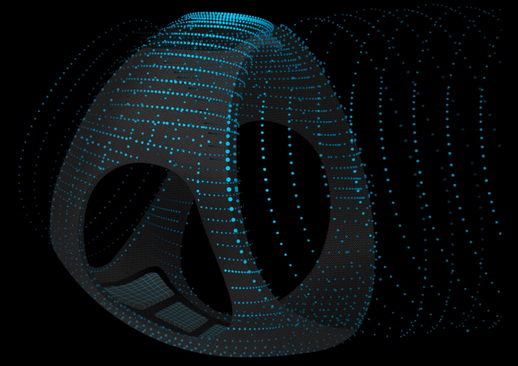

CHEST CUSHIONING

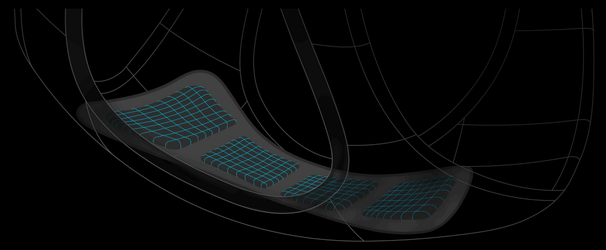

DEWORMING COMPARTMENT

PETPOD
PET CARRIER

The Petpod cat and small dog Carrier is the travelling bag for the pet parent who treats their furry friend like their little sidekick. With two different colors to choose from, share every journey with your beloved furry friend and take them wherever you go safely, stylishly, and easily. With optimal ventilation and comfort, take your furry best friend everywhere while they enjoy the scenic world around them. This Cat Carrier is not only an amazing gift but can also work as a dog carrier!

PETPOD PET CARRIER

FEATURES

Built In Fan

The quiet built-in fan provides fresh air flow for your pets while inside the pet carrier.

Tinted Window

The tinted viewing panel allows your pet to enjoy the beautiful scenery while being protected and shaded from the harsh sun.

Shock Reduction System

The smart shock absorption system is built into the back plate of the backpack and is designed to the force of your pet's weight on your body and minimize shock from moving around. Specially designed metal plated food pads prevent the bag from falling when placed on the floor.

Convenient Size & Breathable

The widened bottom area is designed to increase surface area for your pet to move around inside, while still being a convenient size to wear and transport. The intelligent ventilation system allows for smart, automatic air control dependent on the internal temperature of the bag. This keeps the bag comfortable, breathable, and minimizes noise interference.

DIMENSIONS:
11 X 11 X 16 (INCHES)

WEIGHT:
4.2 (LBS)

PET TYPE:
SMALL TO MEDIUM CATS / SMALL DOGS

MQRS

BRANDS

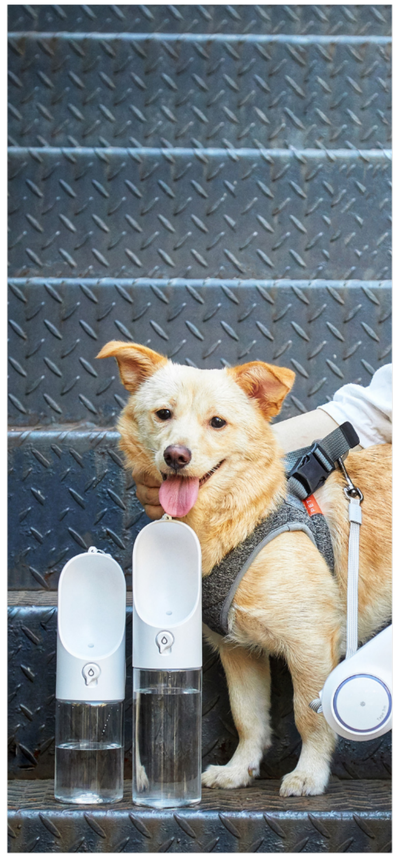

MQRS Holdings Inc.

WWW.INSTACHEW.COM

SALES@INSTACHEW.COM

1 866 922 5554